INL/EXT-14-33710

Light Water Reactor Sustainability Program

Implementation of Software Tools for Hybrid Control Rooms in the Human Systems Simulation Laboratory

November 2014

U.S. Department of Energy

Office of Nuclear Energy

DISCLAIMER

This information was prepared as an account of work sponsored by an agency of the U.S. Government. Neither the U.S. Government nor any agency thereof, nor any of their employees, makes any warranty, expressed or implied, or assumes any legal liability or responsibility for the accuracy, completeness, or usefulness, of any information, apparatus, product, or process disclosed, or represents that its use would not infringe privately owned rights. References herein to any specific commercial product, process, or service by trade name, trade mark, manufacturer, or otherwise, does not necessarily constitute or imply its endorsement, recommendation, or favoring by the U.S. Government or any agency thereof. The views and opinions of authors expressed herein do not necessarily state or reflect those of the U.S. Government or any agency thereof.

INL/EXT-14-33710

Implementation of Software Tools for Hybrid Control Rooms in the Human Systems Simulation Laboratory

Håkon Jokstad, Olof Berntsson, Robert McDonald
Halden Reactor Project

Ronald Boring, Bruce Hallbert, Kirk Fitzgerald
Idaho National Laboratory

November 2014

Idaho National Laboratory
Idaho Falls, Idaho 83415

http://www.inl.gov

Prepared for the
U.S. Department of Energy
Office of Nuclear Energy
Under DOE Idaho Operations Office
Contract DE-AC07-05ID14517

(This page intentionally left blank)

ABSTRACT

The Institute for Energy Technology (IFE) and Idaho National Laboratory have designed, implemented, tested and installed a functioning prototype of a set of large screen overview and procedure support displays for the Generic Pressurized Water Reactor (GPWR) simulator in the U.S. Department of Energy's Human Systems Simulation Laboratory. The overview display is based on IFE's extensive experiences with large screen overview displays in the Halden Man-Machine Laboratory (HAMMLAB), and presents the main control room indicators on a combined three-screen display. The procedure support displays are designed and implemented to provide a compact but still comprehensive overview of the relevant process measurements and indicators to support operators' good situational awareness during the performance of various types of procedures and plant conditions.

(This page intentionally left blank)

ACKNOWLEDGMENTS

This report was made possible through funding by the U.S. Department of Energy (DOE) Light Water Reactor Sustainability (LWRS) Program. The main authors at Halden Reactor Project wish to thank Dr. Bruce Hallbert for project vision, Dr. Ron Boring for technical oversight, and Kirk Fitzgerald for technical support. The vendor of the GPWR simulator, GSE Systems Inc, has greatly supported this project by providing a copy of the GPWR simulator to IFE for this project, by providing access to extensive operating documentation for the GPWR plant and by supporting IFE in solving technical challenges related to accessing simulator variables.

(This page intentionally left blank)

CONTENTS

ABSTRACT ii

ACKNOWLEDGMENTS iv

1. INTRODUCTION 1
   1.1 Background 1

2. LARGE OVERVIEW DISPLAY 3
   2.1 Selection of Prototype and Initial Technology 3
   2.2 Design of Large Screen Overview Display 3
   2.3 Implementation of Large Screen Overview Display 3
   2.4 Testing the Large Screen Overview Display in HAMMLAB 4
   2.5 Installation in the HSSL 4
   2.6 Detailed Description of the Large Screen Overview Display's Features 4
      2.6.1 Description of Generic Objects' Dynamic Features 8
      2.6.2 Detailed Description of Large Screen Overview Display 9
      2.6.3 Components Visible Only When Deviating from Their Normal Operating Position 15

3. OPERATOR SUPPORT DISPLAYS 17
   3.1 Initial Brainstorming and Project Meeting at Halden Reactor Project 17
   3.2 Overall Design 17
   3.3 Installation and Initial Testing of Setup 18
   3.4 Detailed Design 18
   3.5 Implementation and Internal Testing at IFE 18
   3.6 Installation and Testing in HSSL 18
   3.7 Detailed Layout of the Procedure Support Displays 18
      3.7.1 Normal-Mode Operation for Reactor Operator 19
      3.7.2 SI-Mode Operation for Reactor Operator 20
      3.7.3 Normal-Mode Operation for BOP Operator 21
      3.7.4 EOP-Mode Operation for BOP Operator 22
      3.7.5 Navigation 23

(This page intentionally left blank)

1. INTRODUCTION

1.1 Background

The Institute for Energy Technology (IFE) operates the Office of Economic Cooperation and Development (OECD) Halden Reactor Project (HRP) and has extensive experience from more than 20 years of research in human system interface (HSI) design and operation of nuclear power plant research simulators in Halden Man-Machine Laboratory (HAMMLAB).

HAMMLAB serves two main purposes: the study of human behaviour in interaction with complex process systems; and the development, test and evaluation of prototype control centres and their individual systems. The aim of HAMMLAB is to extend the knowledge of human performance in complex process environments, in order to adapt new technology to the needs of the human operator. By studying operator performance in HAMMLAB, and integrating the knowledge gained into new designs, operational safety, reliability, efficiency and productivity can be improved.

HAMMLAB includes two nuclear power plant simulators and a modern, computer-based, highly configurable experimental control room with extensive features for studying operator crew performance. HAMMLAB's two full-scope nuclear power plant simulators, named HAMBO and RIPS, represent a Swedish BWR plant (Forsmark 3), and a typical Westinghouse 3-loop PWR plant (Ringhals 3).

Idaho National Laboratory (INL) has contracted IFE to help develop digital control room interface prototypes in support of the U.S. Department of Energy's Light Water Reactor Sustainability (LWRS) program. Previous work under this contract has established the technical infrastructure required to implement HSI prototypes based on IFE's technology and experiences from HAMMLAB, and to connect these prototypes to the Generic Pressurized Water Reactor (GPWR) simulator in INL's Human Systems Simulation Laboratory (HSSL). This infrastructure enables INL and partners to design, prototype, and validate HSI technologies that can replace existing analog instrumentation and control.

There are two tasks associated with the development of HSI prototypes. The first task centers on developing a large overview display prototype, while the second task entails developing operator support displays. The former task provides an overview of main functions of the plant available in a shared view in the main control room, while the latter task provides displays to support specific operator functions such as reactor control. The overview displays are therefore meant for use across the control room, while the operator support displays are meant for use by individual operators.

(This page intentionally left blank)

2. LARGE OVERVIEW DISPLAY

The main purpose of this task is to design and implement HSI prototypes for INL's GPWR simulator in order to enable INL to demonstrate what can be achieved with modern visualisation techniques to improve control room operators' situation awareness. The deliverable associated with this task is a prototype of a large screen overview display for INL's GPWR simulator installed and operating in INL's Human Systems Simulation Laboratory.

2.1 Selection of Prototype and Initial Technology

After internal discussions INL concluded that the project should focus on designing and implementing a large screen overview display for the GPWR simulator, "representing the most important indicators of the control room". The display should be prepared to fit three 1920x1080 pixel screens to be consistent with the hardware available in the HSSL.

IFE and INL agreed that the project should use the most recent large screen overview display from HAMMLAB's PWR simulator as a basis and adapt the display to match the simulated GPWR plant.

2.2 Design of Large Screen Overview Display

The actual design was carried out by IFE personnel with extensive operating experiences as operators, shift supervisors and instructors from a Swedish Westinghouse three-loop PWR plant. They also have experiences from HSI design from HAMMLAB, including a recent upgrade of the large screen overview display for HAMMLAB's PWR simulator based on feedback from Swedish and US operators participating in a HAMMLAB experiment in 2011.

A major task during the design phase was to identify the differences between HAMMLAB's simulated PWR plant and the GPWR plant. For this task, an extensive study of the GPWR softpanels was carried out. Also, operating documentation for the GPWR simulator, including EOPs, PLSs and logic schemes, were studied.

The design was documented as drawings using Microsoft Visio.

2.3 Implementation of Large Screen Overview Display

The live HSI prototype was implemented using IFE's graphics software tool, ProcSee (see www.ife.no/procsee). The implementation of the display reused as much as possible from HAMMLAB's PWR simulator, in particular the implementation of the generic graphics objects.

The implementation includes configurable settings to support the presentation of the display in three different ways:

1. as a combined horizontal display
2. as a combined vertical display
3. as three individual displays

A major task during the implementation was to identify the GPWR simulator tag, value range and engineering unit for all indicators to be presented in the display.

2.4 Testing the Large Screen Overview Display in HAMMLAB

During implementation, the dynamic behaviour of the large screen display was tested out by the developer. As the basic components were re-used from HAMMLAB's PWR large screen display, the main focus of this testing was to verify that the value and value-range of the variables were correctly configured.

Operational testing of the large screen overview display was carried by the main designer, using his PWR operation experience to run scenarios in the GPWR simulator and verify that the dynamics of the large screen overview display correctly reflected the simulator state at all times. Comparing the values of the large screen overview display with the GPWR simulator's soft panels to ensure consistency was a major task in this phase.

2.5 Installation in the HSSL

IFE completed the implementation and testing in Halden in mid December and provided for INL to download and install the software. The software was installed by INL in the HSSL in January according to IFE's instructions and subsequently tested by INL personnel.

2.6 Detailed Description of the Large Screen Overview Display's Features

The large screen overview display, when presented as a combined horizontal display, is a 5760x1050 pixel display which looks like this:

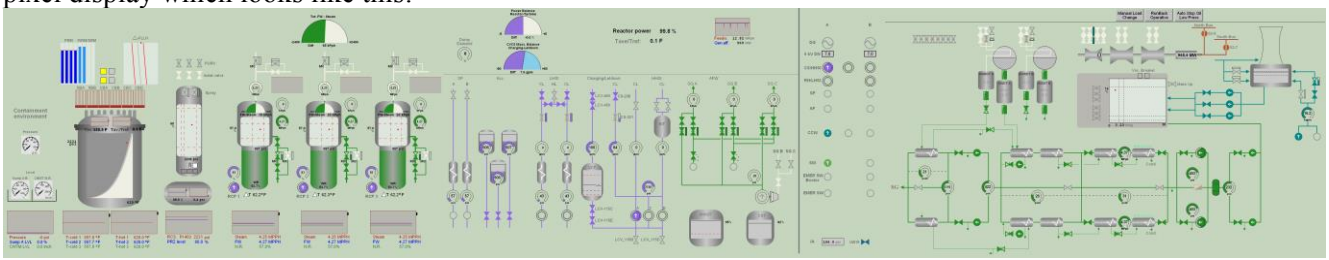

The display consists of three individual parts which can be presented separately on individual screens. These are, from left to right, Reactor side, Safety systems and Turbine side. For better readability in this report, the three parts are presented separately in the following three full-page figures.

Reactor side

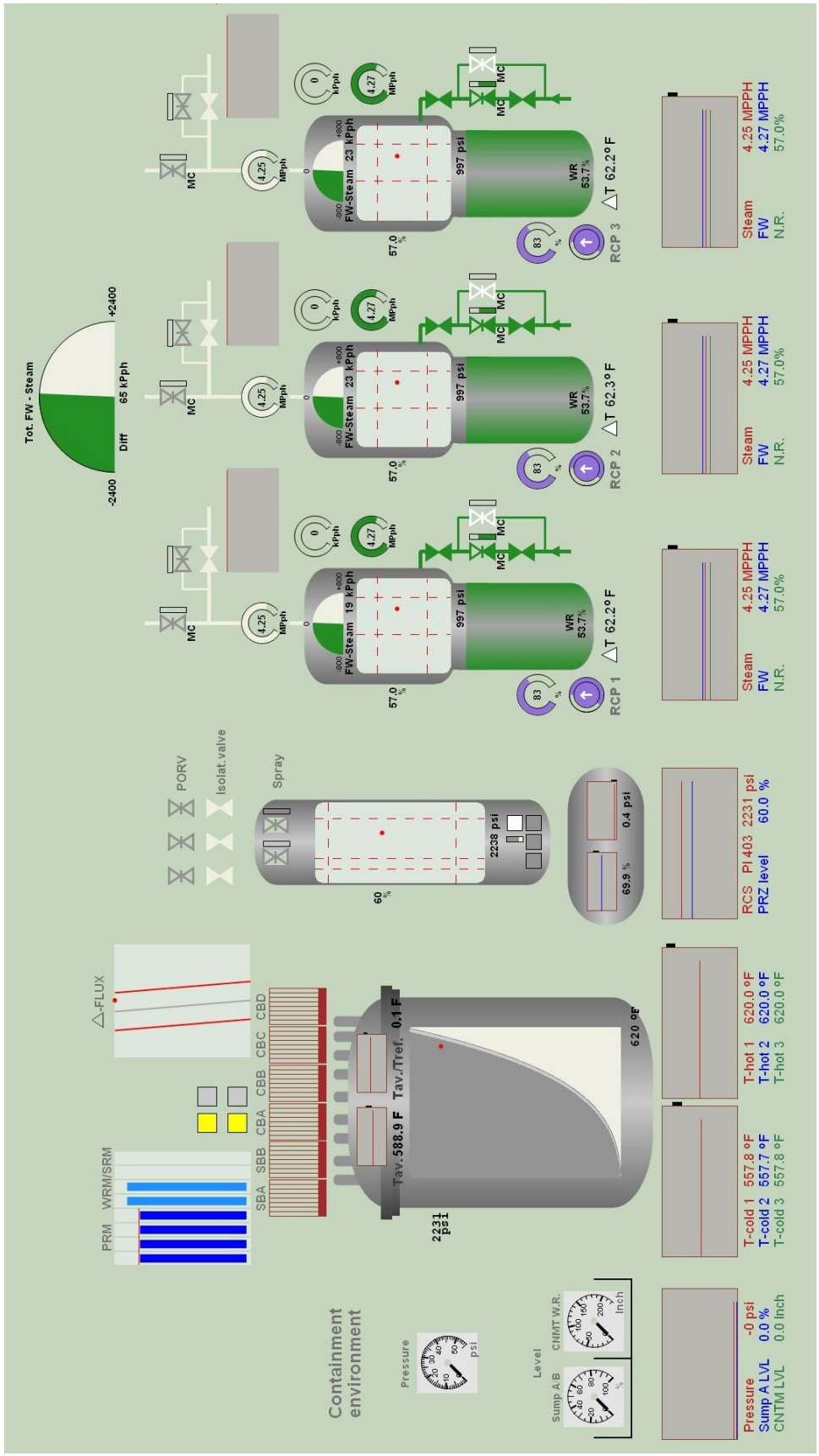

Safety systems

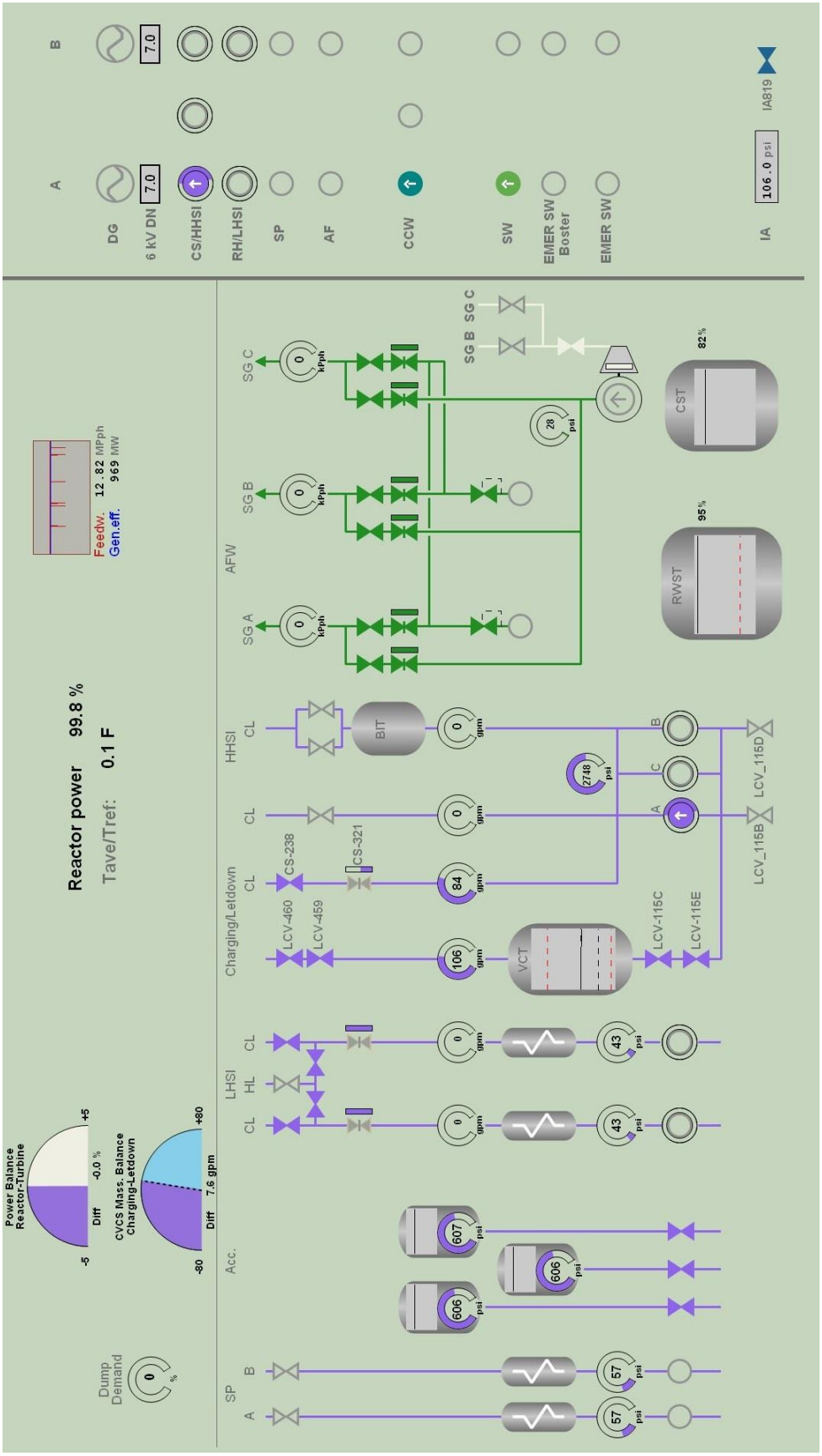

Turbine side

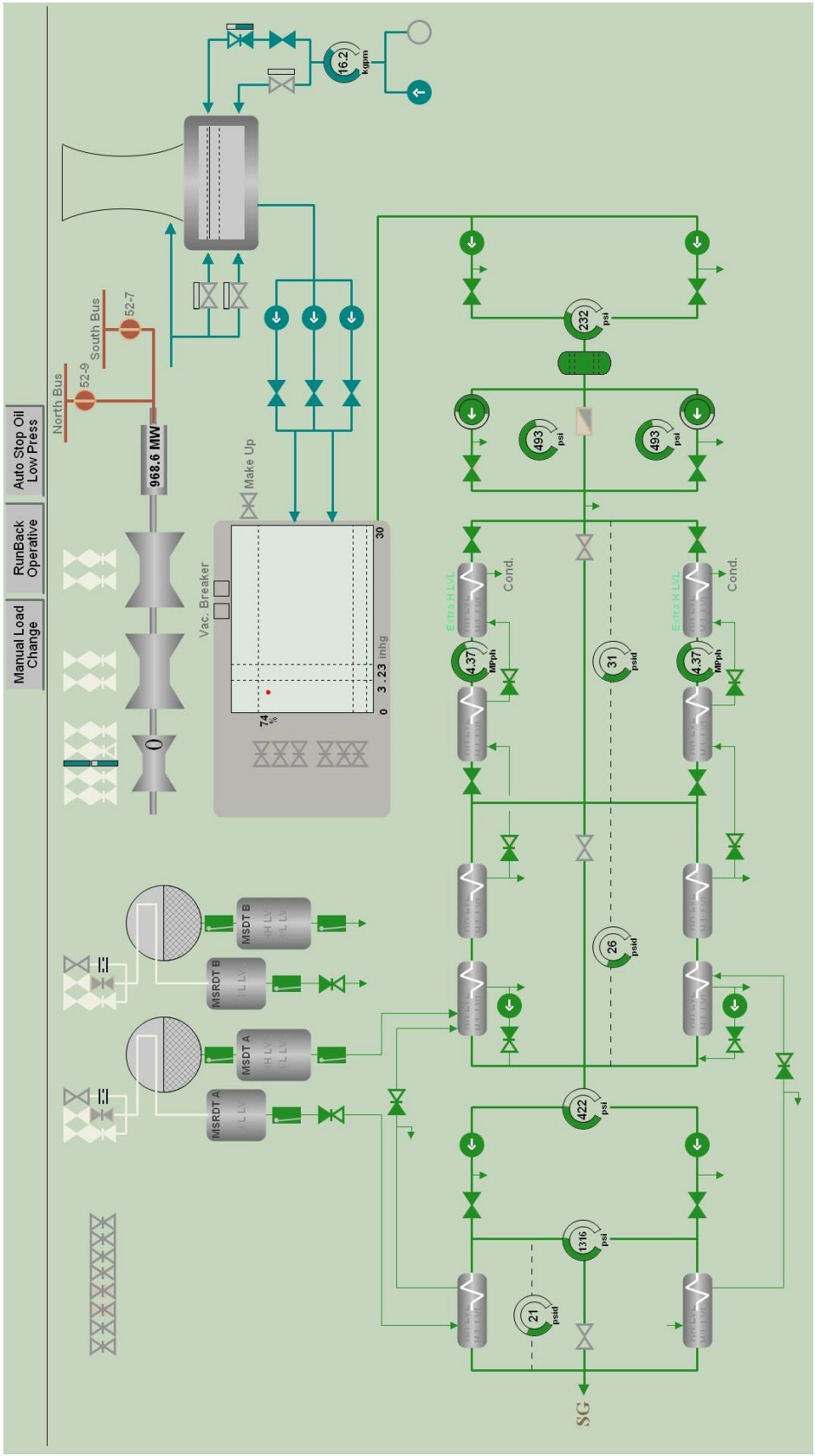

2.6.1 Description of Generic Objects' Dynamic Features

Medium flowing

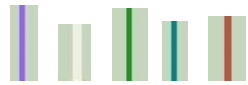

Different colours represent different types of media. Primary circuit water is magenta (1). Secondary circuit steam is white (2) and feed water is green (3). Cooling water is turquoise (4). Electric current is brown (5).

Valves

Closed (1) and open (2). Regulating valves have an additional line accros its centre. In intermediate positions, the polygon is partly filled. A bar indicates its controller's output if available (3). If no position is available, the valve is filled grey (4).

Check valves

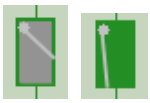

Closed (1) and open (2).

Pumps

Stopped (1) and running (2). Arrow indicates flow direction. Where available, the flow through a pump is indicated by an outer circle, growing clockwise as the flow increases to its maximum level (3).

Breakers

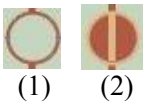

Open (1) and closed (2).

Diesel generators

Not connected to the grid (1) and connected to the grid (2)

Meters

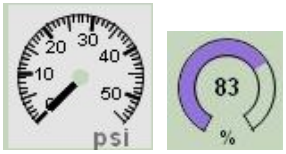

Meters visualise a value within a range. The unit is also provided.

Alarms

Inactive (1) and active (2)

Balance indicators

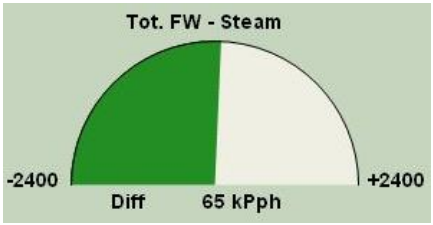

Balance indicators compare (calculated) values that should normally be equal.

Trends

Trend curves visualise 10 minutes of history. It may be autoscaled to help detect small changes at an early stage.

The small black rectangle to the right is visible if the trend is auto-scaled. Its height indicates the ratio of the visible view compared to the value min-max range. Its position indicates the position of the view compared to the min-max range.

XY-diagrams with operating point

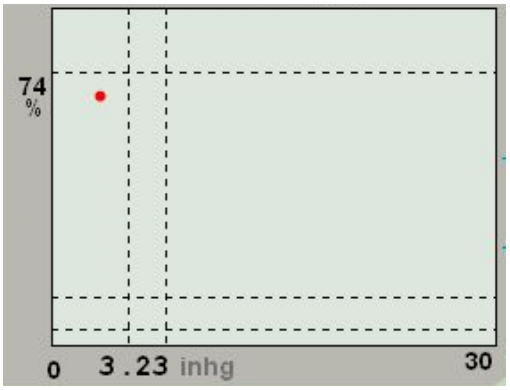

The diagrams visualise the current value within its range for a pair of variables, one horisontally and one vertically. The small red circle indicates the current value. As the values change, the circle moves and creates a tail to indicate its path over the last 30 minutes.

Dotted horisontal and vertical lines represent alarm limits

2.6.2 Detailed Description of Large Screen Overview Display

This section describes in detail what each indicator in the large screen overview display represents. The numbers in the figures are explained in the following.

Reactor side

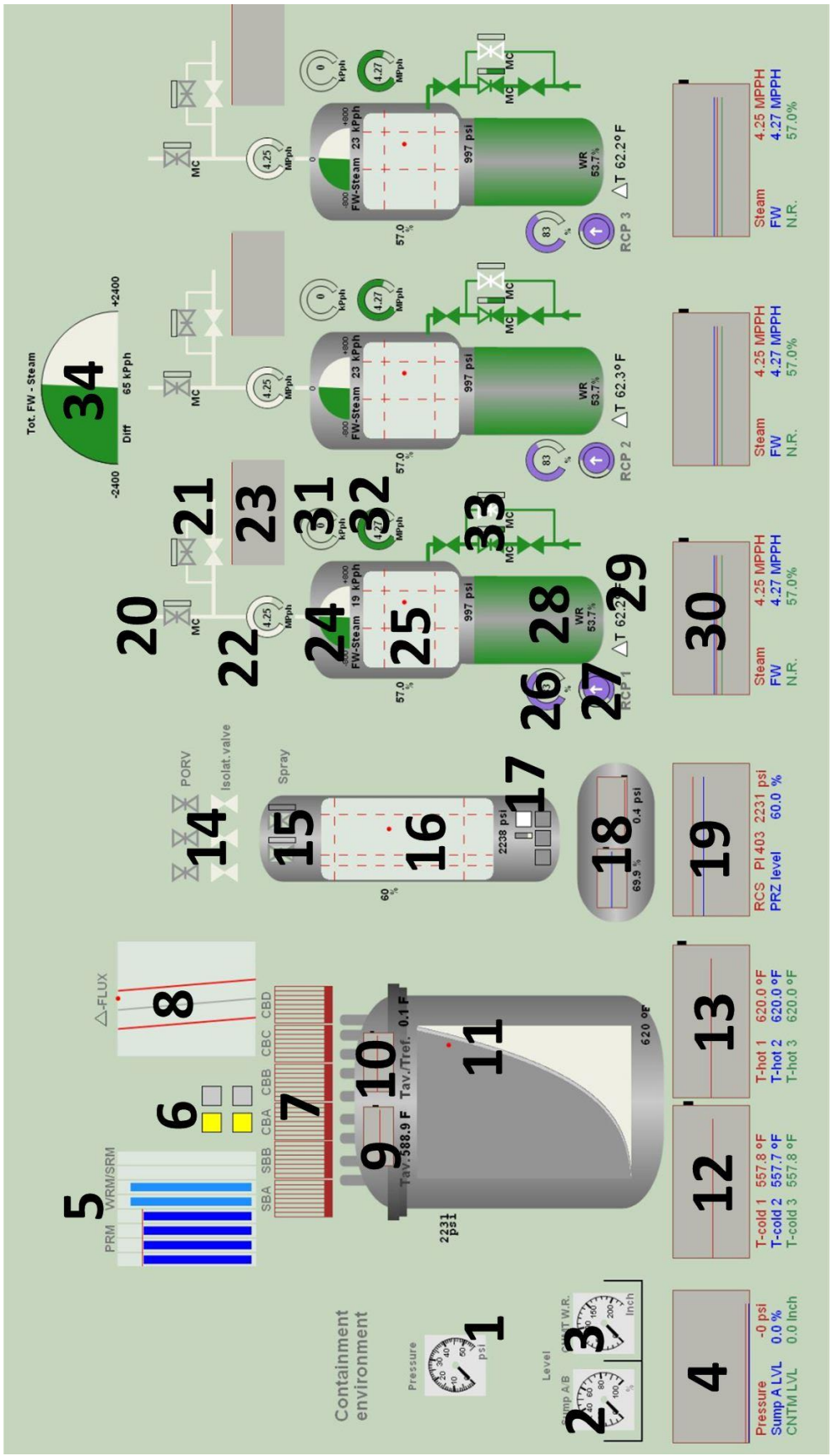

Safety systems

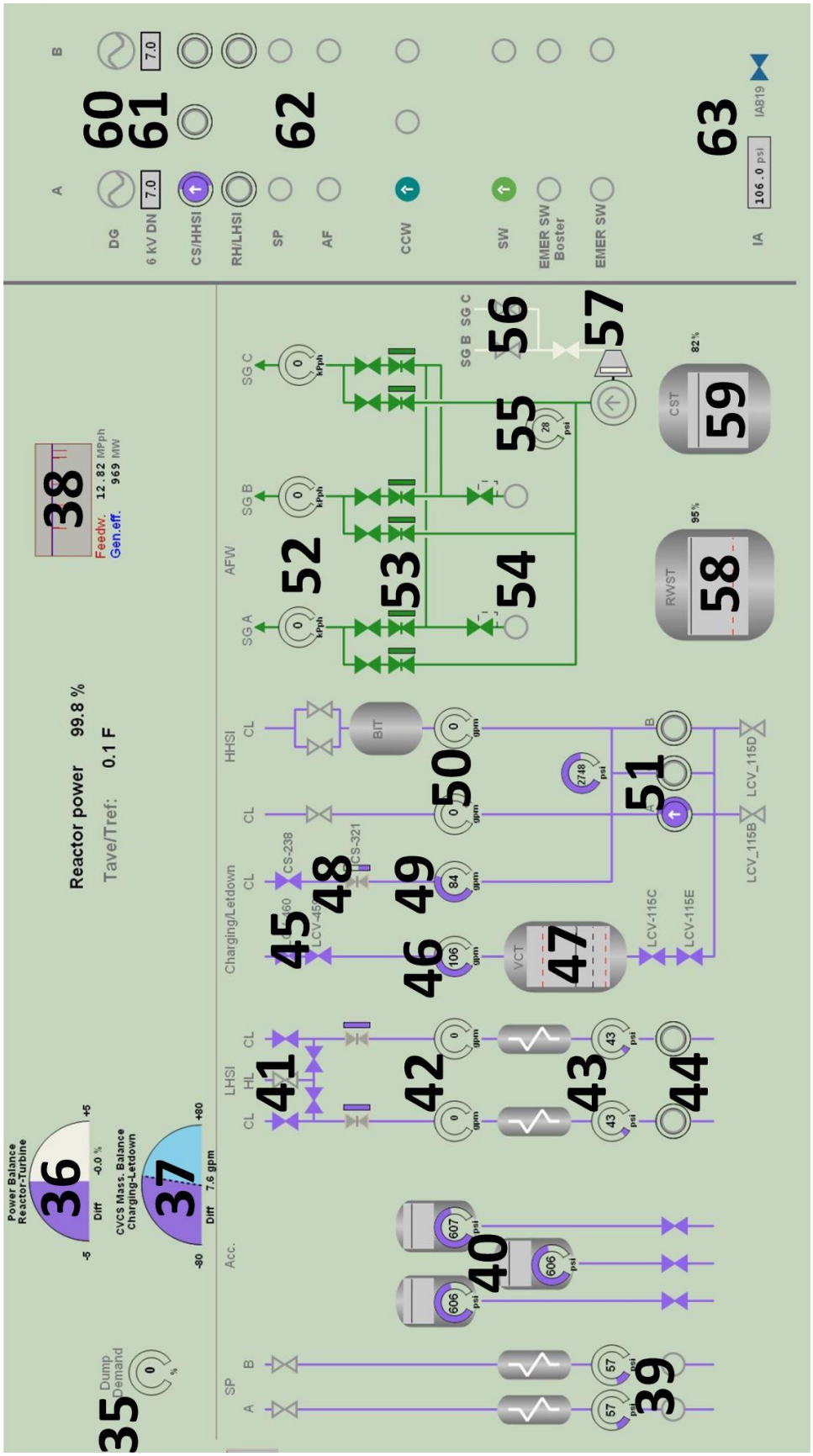

Turbine side

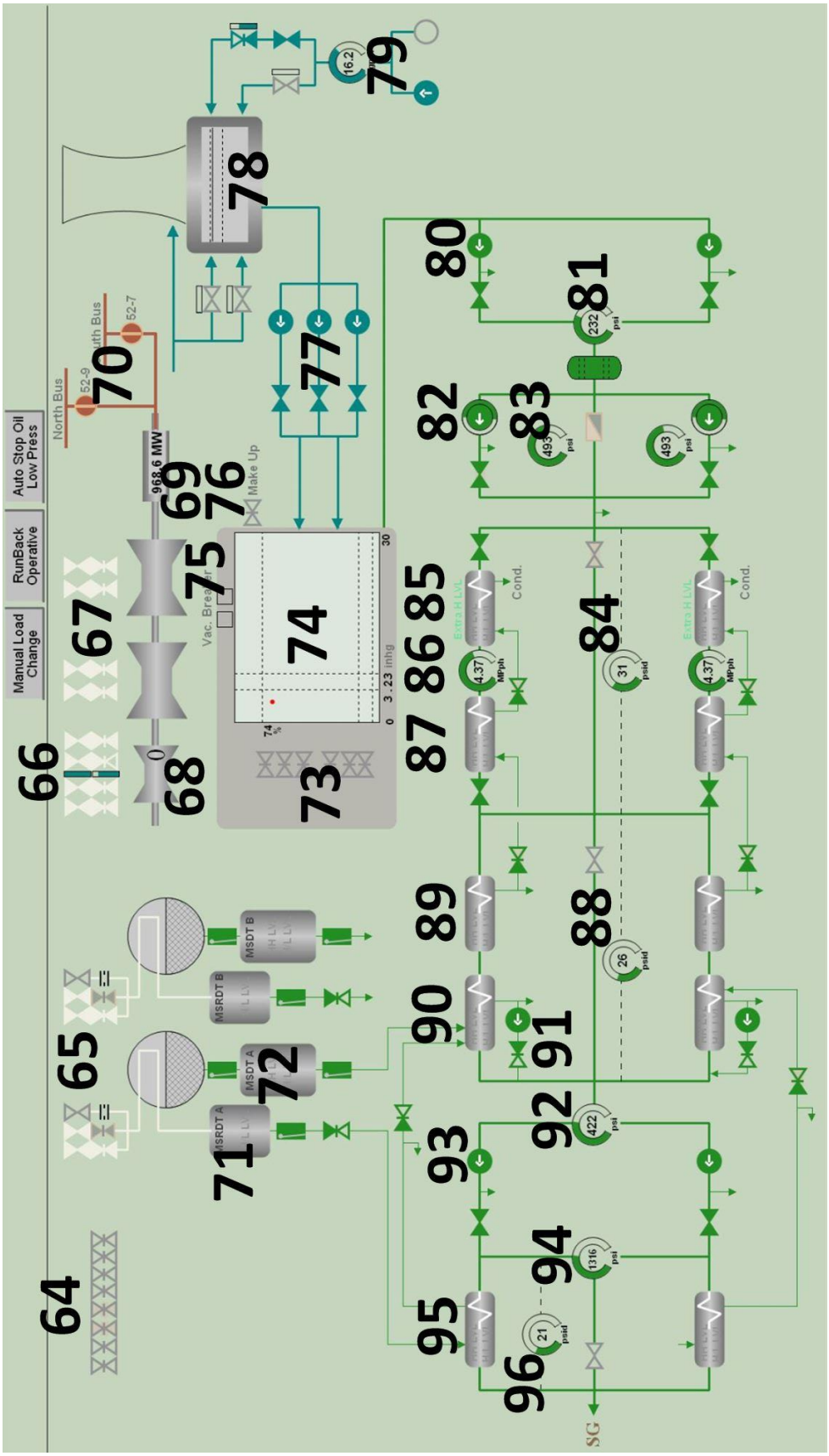

1. Containment pressure, 2 instruments in one
2. Containment sump A and B level
3. Containment level wide range, 2 instruments in one
4. Trend of (1-3), fixed scale
5. PRM, WRM and SRM. SRM displayed when energized
6. Reactor trip (left) and bypass breakers (right). Yellow = closed
7. Rod position indicators (not yet connected to simulator)
8. Delta-Flux (x-axis) and reactor power (y-axis). Red lines indicate alarm limits
9. T-average mini trend, autoscaled
10. Difference T-average – T-ref mini trend, autoscaled
11. Reactor tank temperature and pressure. Saturation curve and 10° F margin indicated. 40° F margin also indicated when containment pressure > 3 psig. Temperature is currently hot leg temperature, should be highest thermocouple.
12. Cold leg temperature trend, autoscaled
13. Hot leg temperature trend, autoscaled
14. Pressurizer porvs and isolating valves
15. Pressurizer spray valves
16. Pressurizer pressure and level. Indication lines for reactor trip high/low pressure, safety injection low pressure, reactor trip high level and discharge isolation low level
17. Control heater with requested output indicated. Support heaters. White color = breaker closed.
18. Trend of pressurizer relief tank level and pressure
19. Trend of pressurizer level and pressure
20. Steam generator porv to atmosphere
21. Main steam isolation valves
22. Steam flow
23. Radiation monitor main steam line (not yet connected to simulator)
24. Balance, feed water vs steam
25. Steam generator pressure and level (narrow range). Indication lines for safety valves set point (high pressure), safety injection and steam isolation (low pressure), turbine trip and feed water isolation (high level) and reactor trip (low level).
26. RCS loop flow
27. RCP with current
28. Steam generator wide range level. Green fill color and value.(Cold calibrated)
29. Difference hot leg - cold leg
30. Steam generator trend, autoscaled
31. Auxiliary feed water flow
32. Main feed water flow
33. Main feed water valves
34. Balance, feed water vs steam, sum of all steam generators
35. Dump demand
36. Power balance reactor vs turbine
37. Mass balance charging vs letdown. Dotted line indicates normal balance due to RCP seals leakage.
38. Trend of feed water flow and generator power
39. Containment spray pump and pump pressure
40. Accumulators. Trends of levels, 0-100%. Indication of pressure and isolation valves
41. Low head safety injection (LHSI) valves
42. LHSI flow

43. LHSI pump pressure
44. LHSI pump with current
45. Letdown isolation valves
46. Letdown flow
47. Volume control tank level 0-100%. Grey dotted lines indicate start/stop makeup. Red dotted lines indicate isolation (low level) and letdown forced to holdup tank (high level)
48. Charging flow valves
49. Charging flow
50. SI-flow through and bypass BIT
51. Charging/HHSI pumps with current
52. Auxiliary feed water flow
53. Manual control valves, auxiliary feed water flow
54. Auxiliary feed water pump, electrical
55. Auxiliary feed water pump, pressure steam driven
56. Steam isolation valves from steam generators
57. Auxiliary feed water pump, steam driven. With indicated speed in the pump symbol.
58. RWST level, 0-100%. Red dotted line indicates changeover to recirculation
59. CST level, 0-100%
60. Diesel feed of safety grids
61. Voltage on safety grids
62. Safety related pumps
63. Instrument air pressure and supply valve to containment
64. Dump-valves to atmosphere
65. Moister separator reheaters valves
66. Steam valves to high pressure turbine and indication of control signal
67. Steam valves to low pressure turbine
68. Turbine speed (not connected to simulator)
69. Generator power
70. Generator breakers
71. Reheater drain tank with level alarm
72. Moister separator drain tank with level alarms
73. Dump to condenser
74. Condenser tank pressure and level. Dotted vertical lines indicate turbine trip (5 inhg at ≤ 60 % power), and turbine trip with dump isolation (7.5 inhg at > 60 % power). Horisontal dotted lines indicate high, low and low low alarm levels.
75. Vacuum breakers, lighted squares equals open
76. Make up to condenser
77. Circulating water pumps and valves
78. Cooling tower basin level, with high and low level indications
79. Cooling tower make-up pumps and flow
80. Condensate pump
81. Condensate pump pressure
82. Condensate booster pump with indicated speed
83. Condensate booster pump pressure
84. Heater 1 & 2 delta pressure
85. Heater 1, with H/L-level, HH-level and Extra H-level alarms
86. Condensate flow
87. Heater 2, with H/L-level and HH-level alarms
88. Heater 3 & 4 delta pressure
89. Heater 3, with H/L-level and HH-level alarms
90. Heater 4, with H/L-level and HH-level alarms

91. Heater drain pump
92. Main feed water pump suction pressure
93. Main feed water pump
94. Main feed water pump discharge header pressure
95. Heater 5, with H/L-level and HH-level alarms
96. Heater 5 delta pressure

2.6.3 Components Visible Only When Deviating from Their Normal Operating Position

On the turbine side, a number of valves are visible in the display only when deviating from their normal operating position. The rationale for this strategy is to prevent cluttering of the display during normal operation. These valves are illustrated in the figure below.

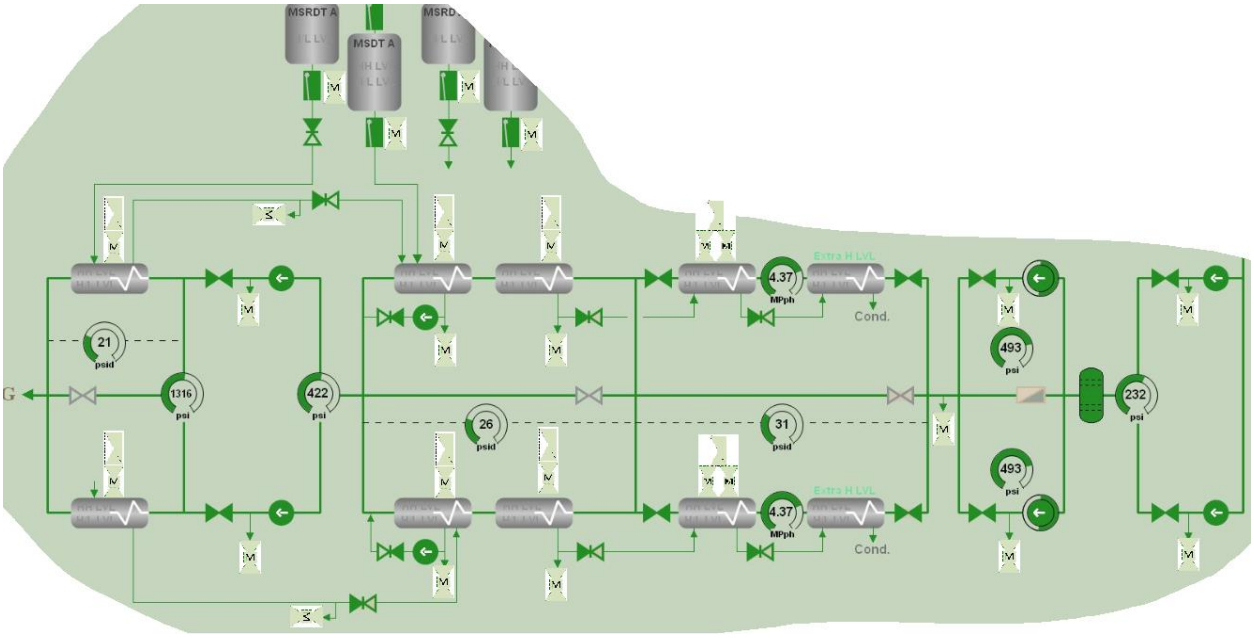

(This page intentionally left blank)

3. OPERATOR SUPPORT DISPLAYS

3.1 Initial Brainstorming and Project Meeting at Halden Reactor Project

A major challenge in this task was how to transform the ideas from HAMMLAB's computer based procedure system into a setting where operations are carried out by operators moving around to the panels' operating buttons, and the progress of the procedure is controlled by the senior reacor operator (SRO).

During a meeting with INL and IFE in Halden, Norway, in June 2014, it was decided to focus on the overview information relevant to the execution of procedures. In HAMMLAB's computer-based procedure system these are available on approximately 50% of a screen. During the meeting, INL wanted to dedicate one and a half screen for each operator to such displays, leaving half a screen available for information from a future computerized procedure system.

At the meeting it was also concluded that the displays should not be interactive for the RO and BOP operators, as the displays were supposed to be presented on a position in the panel not suitable for interaction. Thus, switching of displays for the reactor operator (RO) and balance of plant (BOP) operator should be performed by the senior reactor operator (SRO) from his or her desk.

At the meeting, three scenarios for which the Procedure Support Displays should be focusing were identified. These were:

1. Reactor start-up, or a ramp up in power
2. Loss of station service water
3. Total loss of feed and self-induced steam generator tube rupture on restoration of auxiliary feed to one steam generator

The meeting also concluded that the prototype should be designed to be used for operation according to paper-based procedures, as long as no computerized procedure system is available in the HSSL. If a computerized procedure system is later introduced, it should be considered how the Procedure Support Displays should be integrated with the computerized procedure system.

3.2 Overall Design

In June, the project team ran through the identified scenarios to identify the information needs. From this work it was concluded that four displays should be developed, and that these four displays would cover the information needs for the identified scenarios, as well as most situations in normal, abnormal and emergency operations.

- One normal-mode display and one Safety Injection (SI)-mode display for Reactor Operator. Operator should switch over to SI-mode display at step 4 of Emergency Operating Procedure E0, if SI is activated
- One normal-mode displays and one Emergency Operating Procedure (EOP)-mode display for BOP operator. Operator should switch over to EOP-mode display at step 3 of E0.

Further, the project team identified that it would be sufficient to reserve a single panel screen each for the RO and BOP operator.

Design of the RO's normal mode display and SI-mode display were started, and a first version of these was used during the installation and initial testing.

3.3 Installation and Initial Testing of Setup

Prior to the LWRS Utility Working Group meeting in Idaho Falls in August 2014, IFE implemented the basic system set-up and navigation features and assisted in the installation in the HSSL. The following conclusions were noted at the initial test at this stage:

- One screen each for RO and BOP operator will be sufficient
- The displays will cover some important indicators in the panels. INL should rearrange the content of the panels to provide better locations for the procedure support displays.

3.4 Detailed Design

After the initial testing of the set-up in Idaho Falls, detailed design of the displays continued in Halden. The design was documented as drawings using Microsoft Visio. The designs were also sent to INL for review.

3.5 Implementation and Internal Testing at IFE

The displays were implemented using IFE's graphics software tool, ProcSee, and connected to the simulator variables to provide live visualisations.

All displays are designed to fit a single screen on the HSSL panels, with a resolution of 1920x1080 pixels. Should the actual screen resolution be different, the implementation includes an automatic scaling feature to best-fit the display to the actual screen. This is primarily relevant for the SRO's screen.

Operational testing of the displays was carried out in HAMMLAB by the main designer, using his PWR operation experience to run scenarios in the GPWR simulator and verify that the dynamics of the displays correctly reflected the simulator state at all times. During the testing, a series of minor design issues were identified and immediately corrected.

3.6 Installation and Testing in HSSL

IFE completed the implementation and testing in Halden and provided for INL to download and install the software. The software was installed by INL in the HSSL according to IFE's instructions.

The installation was tested in HSSL by IFE and INL staff on November 10 through a series of simulator sessions, using the Procedure Support Displays in paralell with the simulated operating panels. The system performed successfully and will be further evaluated as part of a future operator study at the HSSL.

3.7 Detailed Layout of the Procedure Support Displays

The four displays are presented in Sections 3.7.1 to 3.7.4 below. The generic objects' dynamic features are the same as those used for the large screen overview display described in Section 2.

3.7.1 Normal-Mode Operation for Reactor Operator

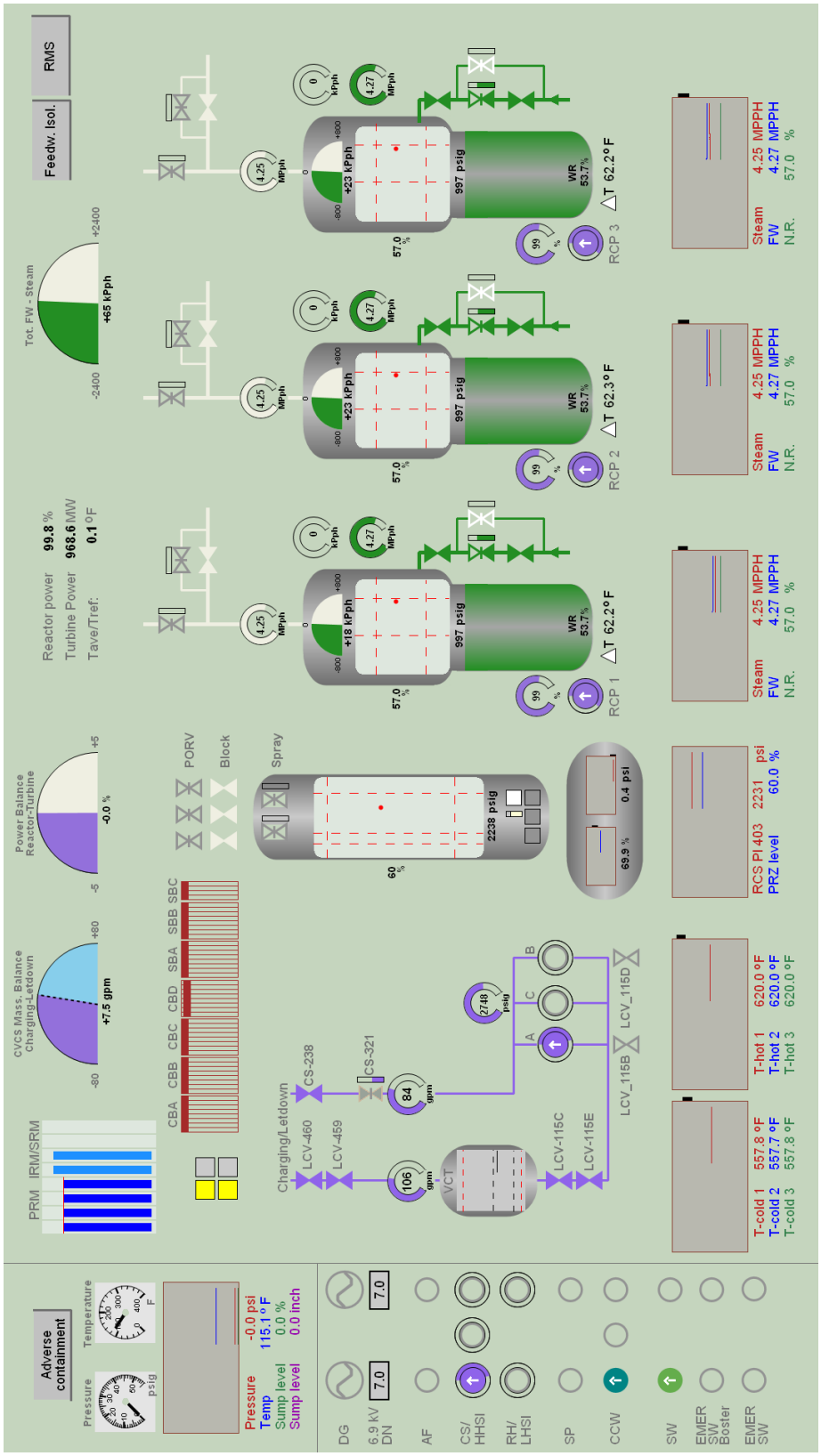

3.7.2 SI-Mode Operation for Reactor Operator

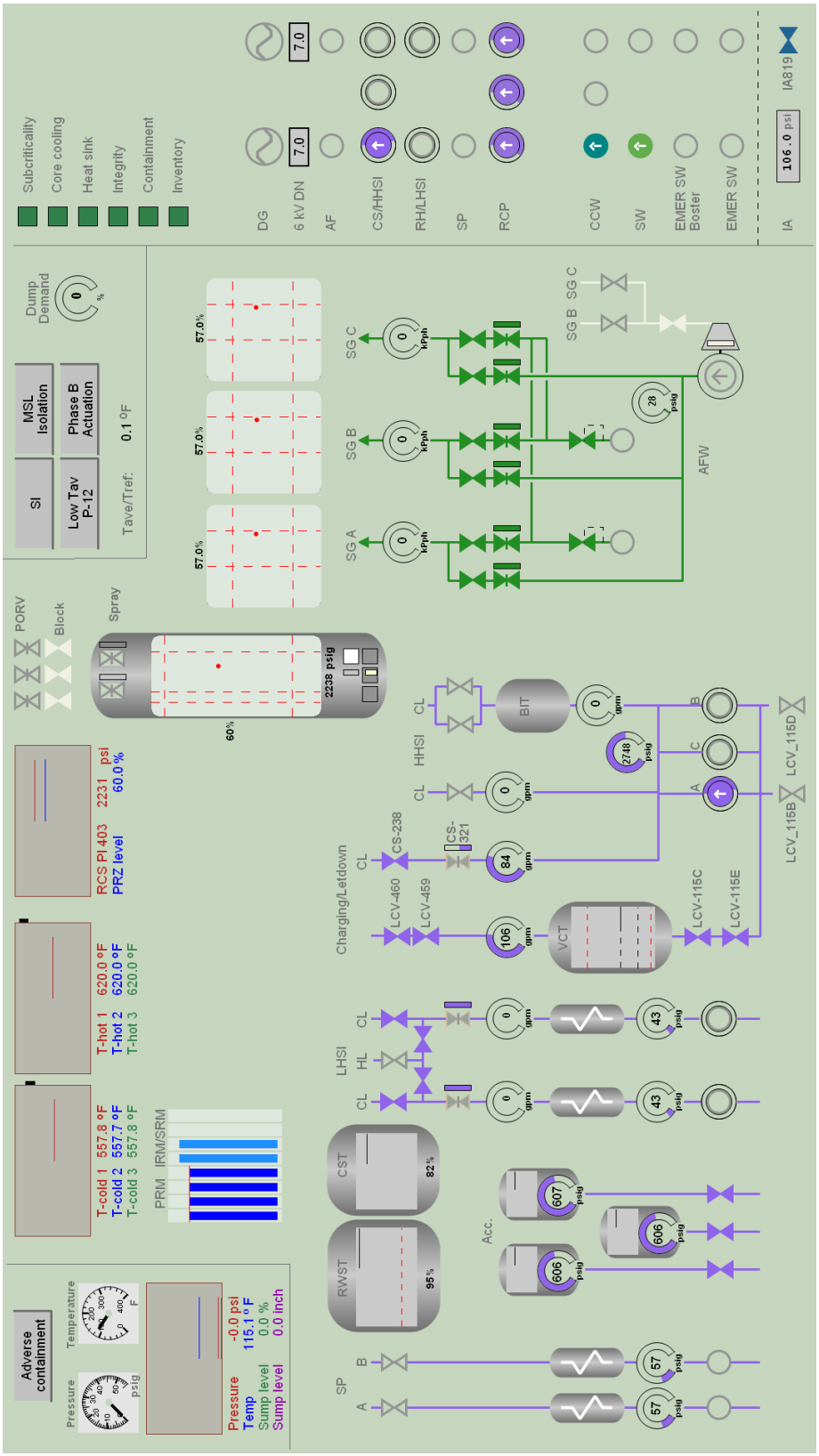

3.7.3 Normal-Mode Operation for BOP Operator

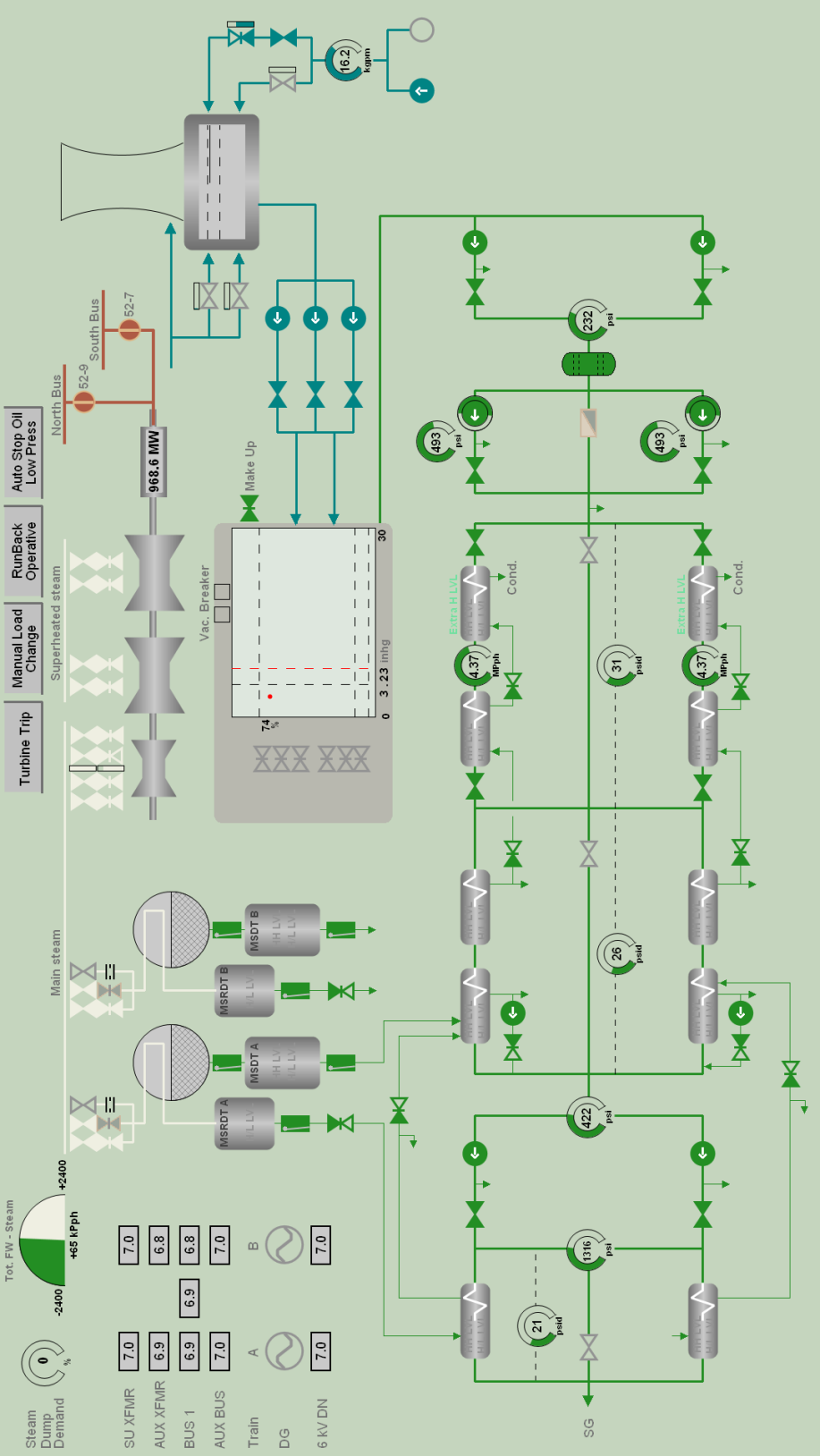

3.7.4 EOP-Mode Operation for BOP Operator

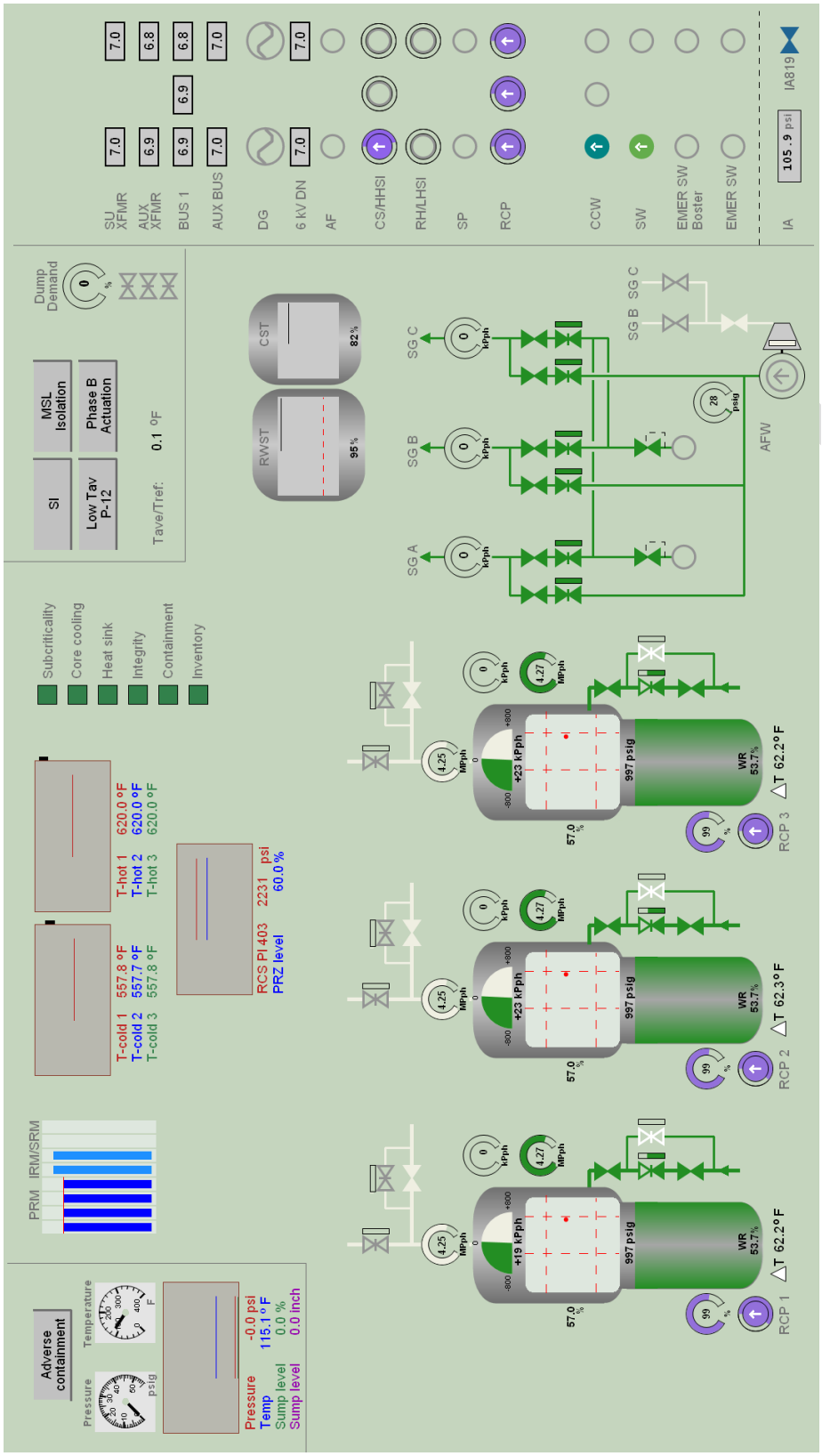

3.7.5 Navigation
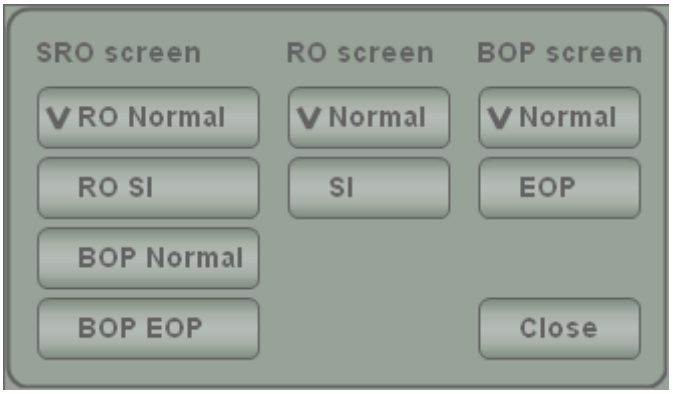
According to the design decissions, all navigation is handled from the SRO's desk. Right-clicking on the SRO's display brings up a pop-up menu enabling the SRO to switch display for any operator, ref figure below. On his own desk the SRO can bring up any of the four displays, while only the two relevant displays are available for RO and BOP operators.