INL/EXT-16-38089

Light Water Reactor Sustainability Program

RISMC Toolkit and Methodology Research and Development Plan for External Hazards Analysis

Ronaldo H. Szilard
Justin L. Coleman
Steven R. Prescott
Carlo Parisi
Curtis L. Smith

March 2016

DOE Office of Nuclear Energy

DISCLAIMER

This information was prepared as an account of work sponsored by an agency of the U.S. Government. Neither the U.S. Government nor any agency thereof, nor any of their employees, makes any warranty, expressed or implied, or assumes any legal liability or responsibility for the accuracy, completeness, or usefulness, of any information, apparatus, product, or process disclosed, or represents that its use would not infringe privately owned rights. References herein to any specific commercial product, process, or service by trade name, trade mark, manufacturer, or otherwise, does not necessarily constitute or imply its endorsement, recommendation, or favoring by the U.S. Government or any agency thereof. The views and opinions of authors expressed herein do not necessarily state or reflect those of the U.S. Government or any agency thereof.

INL/EXT-16-38089

Light Water Reactor Sustainability Program

RISMC Toolkit and Methodology Research and Development Plan for External Hazards Analysis

Ronaldo H. Szilard
Justin L. Coleman
Steven R. Prescott
Carlo Parisi
Curtis L. Smith

March 2016

Idaho National Laboratory
Idaho Falls, Idaho 83415

http://www.inl.gov/lwrs

Prepared for the
U.S. Department of Energy
Office of Nuclear Energy
Under DOE Idaho Operations Office
Contract DE-AC07-05ID14517

ABSTRACT

This report includes the description and development plan for a Risk Informed Safety Margins Characterization (RISMC) toolkit and methodology that will evaluate multihazard risk in an integrated manner to support the operating nuclear fleet. It describes a plan for; (1) using existing industry tools in an integrated framework, these methods and tools are termed "baseline"; and (2) using an "advanced" toolset built on the MOOSE framework. The advanced toolset development is being guided by gaps identified using the baseline toolset.

External natural hazards that impose a threat to a nuclear power plant (NPP) can originate at different times and areas, and can be related to each other. The proposed plan uses realistic models that represent both the NPP and the hazards to evaluate, quantify, and understand the multihazard effect over time. This plan also provides industry with an advanced toolset and methodology that provides best estimate risk tools for plant decision making, aimed at improving economics while maintaining high levels of safety.

The multihazard tools and methods are currently being developed within RISMC. Realistic NPP applications of these tools and methods are known as "industry applications." The problem the industry application activity is solving is a realistic representation of an NPP, including systems, structures, and components (SSCs), subjected to multiple hazards that are of direct interest to an NPP owner and operator.

This industry application (IA#2) within the Light Water Reactor Sustainability (LWRS) Program, RISMC R&D Pathway, uses a Risk-Informed Margin Management (RIMM) approach. This approach represents meaningful (i.e., realistic facility representation) event scenarios and consequences by using an advanced 3D facility representation that will:

- Identify, model, and analyze the appropriate physics that need to be included to determine plant vulnerabilities related to external events.
- Manage the communication and interactions between different physics modeling and analysis technologies.
- Develop the computational infrastructure through tools related to plant representation, scenario depiction, and physics prediction.

In order to enable probabilistic aspects of NPP external events modeling, we will use event simulation as the quantification method. Successfully linking probabilistic simulation to external events physics is a key facet of advanced methods and will directly address problems such as highly time-dependent and location-specific seismic and flooding scenarios.

The IA#2 plan includes two external hazards, seismic and flooding. The hypothetical flooding at the modeled generic NPP is caused by either seismically-induced failure of an adjacent levy or seismically-induced internal flooding as a result of pipe breaks within the NPP. Note that any plant information for the "generic" facility model has been taken from publically-available sources or has been constructed by the RISMC development team. An early demonstration will assess the impact of a seismically-induced flooding using the RIMM integrated process. Elements of the process include development of a generic NPP at a generic site, and generic levy and seismic hazard. The problem will assume multiple seismic events that produce ground motion at the generic site. These ground motions will be used to assess probabilities of SSC failures at the NPP and the adjacent levy. Based on the probabilities of failure on piping systems and of the levy

flooding, analysis will be run in those locations. Multi-year planning is presented in this report addressing this problem and set-up.

Also presented in this report is a plan for application of advanced research and development (R&D) methods and tools to evaluate external hazard risk and decision-making. The seismic portion of the industry application will focus on understanding the benefits of using advanced SPRA methods and tools to perform calculations for actual NPPs. For the planning activities, we will also consider advanced nonlinear soil-structure interaction models to provide best estimate NPP and system response by reducing uncertainty.

CONTENTS

ABSTRACT iii

FIGURES vi

TABLES vii

ACRONYMS vii

1. Introduction 1
   1.1 Background 1
   1.2 The Risk-Informed Margin Management (RIMM) Approach 1

2. Light Water Reactor Models 5
   2.1 The INL Generic Pressurized Water Reactor (IGPWR) Model 5
      2.1.1 Flooding Models 5
      2.1.2 Seismic Models 6
      2.1.3 Deterministic Systems Models 10
         2.1.3.1 Scope 10
         2.1.3.2 Main system 10
         2.1.3.3 Engineered Safeguards 14
         2.1.3.4 Containment 15
         2.1.3.5 Balance-of-Plant and Auxiliary components 16
      2.1.4 PRA Models 18
         2.1.4.1 Traditional PRA Model 18
         2.1.4.2 Dynamic PRA Model 18
      2.1.5 Plant Spatial Models 21
         2.1.5.1 Model Development 21
         2.1.5.2 Piping – Fragility Models 24
   2.2 The INL Generic Boiling Water Reactor (IGBWR) Model 24

3. The RISMC Methodology and Toolkit 25
   3.1 Phase I – EEVE-B (Baseline) 25
      3.1.1 Example of Baseline Workflow 25
   3.2 Phase II – EEVE-A (Advanced) 26
      3.2.1 Example of Advanced Workflow 26

4. The Industry Application Roadmap (FY 2016 – FY 2020) 28

5. Work Plan Summary 31

6. References 32

FIGURES

Figure 1. Current Risk Calculation Approach that Generally Considers External Hazards in a Silo versus the Advanced RIMM Approach that Considers External Hazards Together. 2

Figure 2. High-Level Features of the External Events Analysis Approach. 3

Figure 3. User Interface for Neutrino. 6

Figure 4. Integration of Advanced SPRA and Internal and External Flooding in the Larger RISMC Program. 7

Figure 5. Results Comparing Linear versus Nonlinear Analysis at Different Levels of Shaking at a Point In-Structure. 8

Figure 6. Advanced Toolset MOOSE-Based Applications. 9

Figure 7. MASTODON Coupled with a BISON Demonstration Problem of Inclined Wave Propagation and Seismic Effects on a Nuclear Fuel Rod. 9

Figure 8. Representative Industry Application. 10

Figure 9. RELAP5-3D RPV Model. 13

Figure 10. RELAP5-3D MCC & SG Model. 13

Figure 11. RELAP5-3D Core Model. 14

Figure 12. IGPWR ESF. 15

Figure 13. IGPWR Sub-Atmospheric Containment. 16

Figure 14. IGPWR BOP Scheme. 16

Figure 15. IGPWR RHR System Scheme. 17

Figure 16. IGPWR CCWS Scheme. 17

Figure 17. An Example of a Fault Tree for a Pump with Affected by Several Failure Methods Including Seismically Induced Failures. 18

Figure 18. Flow Diagram for Processing and EMRALD Model. 19

Figure 19. Example of EMRALD State Diagrams for Several Components and their State Changes. 19

Figure 20. Example of an EMRALD Plant Response State Diagram Executing and Evaluating RELAP Results. 20

Figure 21. Top View (Floor Slab with Shaft Openings to the Bottom Floor). 22

Figure 22. Same Top View without the Floor Slab, with Green Color Indicating the Batteries and Switchgear. 22

Figure 23. Zoomed In View of Batteries in Battery Room. Each Green Battery Block Represents 2 Rows of Batteries for a Total of 4 Rows of Batteries per Battery Room. 23

Figure 24. Schematic Illustration of EEVE-A and EEVE-B. 25

Figure 25. Schematic Illustration of EEVE-B. 26

Figure 26. Schematic Illustration of EEVE-A. 27

TABLES

Table 1. Design Parameters of the IGPWR. 11
Table 2. An Example of SolidWorks .STL Files. 23
Table 3. EEVE-A/B Timeline of Activities and Respective Technical Areas of Development. 28

ACRONYMS

AFW	Auxiliary Feed-Water
A-SPRA	Advanced Seismic PRA
BDBA	Beyond Design Basis Accident
BOP	Balance of Plant
BWR	Boiling Water Reactor
CCW	Component Cooling Water System
CDF	Core Damage Frequency
CST	Condensate Storage Tank
DBA	Design Basis Accident
DOE	Department of Energy
EE	External Events
ECCS	Emergency Core Cooling System
EDG	Emergency Diesel Generator
ESF	Engineered Safeguards
EPRI	Electric Power Research Institute
EQ	Earthquake
FSF	Fundamental Safety Functions
FY	Government Fiscal Year
HPI	High Pressure Injection
HPIS	High Pressure Injection System
IA2	Industry Application #2
IGBWR	INL Generic BWR
IGPWR	INL Generic PWR
INL	Idaho National Laboratory
LOCA	Loss-of-coolant Accident
LPIS	Low Pressure Injection System
LWRS	Light Water Reactor Sustainability
MCC	Main Circulation Circuit
MCP	Main Coolant Pump
MFW	Main Feed-Water
MOOSE	Multiphysics Object Oriented Simulation Environment
MSLB	Main Steam Line Break
NCSU	North Carolina State University
NLSSI	Non-linear Soil-Structure Interaction

NPP	Nuclear Power Plant
NRC	US Nuclear Regulatory Commission
NUREG	Nuclear Regulatory Report
PORV	Pilot-Operated Relief Valve
PRA	Probabilistic Risk Assessment
PRZ	Pressurizer
PWR	Pressurized Water Reactor
RAVEN	Risk Analysis and Virtual Control Environment
RCS	Reactor Cooling System
R&D	Research and Development
RELAP-7	Reactor Excursion and Leak Analysis Program version 7
RIMM	Risk-Informed Margin Management
RISMC	Risk-Informed Safety Margin Characterization
ROM	Reduced Order Model
RHR	Residual Heat Removal System
RPV	Reactor Pressure Vessel
RWST	Refueling Water Storage Tank
SA	Severe Accident
SBO	Station Black-Out
SG	Steam Generator
SPH	Smooth Particle Hydrodynamics
SPRA	Seismic PRA
SSCs	Structures, Systems, and Components
SSI	Soil-Structure Interaction
SV	Safety Valve
TH	Thermal-hydraulic

RISMC Toolkit and Methodology Research and Development Plan for External Hazards Analysis

1. INTRODUCTION

1.1 Background

Design of nuclear power plant (NPP) facilities to resist external hazards has been a part of the regulatory process since the beginning of the NPP industry in the United States (US), but has evolved substantially over time. The original set of approaches and methods were entirely deterministic in nature and focused on a traditional engineering margins-based approach. In this approach, design is undertaken for each structure, system, and component (SSC) individually based on achieving a capacity that is expected to provide a minimum margin over some specific design load of interest. Neither the risk significance of the SSC nor its role within the facility is considered. The traditional approach also does not account for operator action, redundancy and other risk-related element.

Over time probabilistic and risk-informed approaches were also developed and implemented in US Nuclear Regulatory Commission (NRC) guidance and regulation. A defense-in-depth framework was also incorporated into US regulatory guidance over time. As a result, today, the US regulatory framework incorporates deterministic and probabilistic approaches for a range of different applications and for a range of natural hazard considerations. This framework will continue to evolve as a result of improved knowledge and newly identified regulatory needs and objectives, most notably in response to the NRC activities initiated in response to the 2011 Fukushima accident in Japan.

Although the US regulatory framework has continued to evolve over time, the tools, methods and data available to the US nuclear industry to meet the changing requirements have largely remained static. Notably, there is room for improvement in the tools and methods available for external event probabilistic risk assessment (PRA), which is the principal assessment approach used in risk-informed regulations and risk-informed decision-making. This is particularly true if PRA is applied to natural hazards other than seismic loading. Development of a new set of tools and methods that incorporate current knowledge, modern best practice, and state-of-the-art computational resources would lead to more reliable assessment of facility risk and risk insights (e.g., the SSCs and accident sequences that are most risk-significant), with less uncertainty, and reduced potential conservatisms. New tools would also benefit risk-informed approaches to assessing and managing margin, as discussed the remainder of Section 1 of this document.

Section 2 of this document describes the nuclear power plant (NPP) models necessary for the successful execution of an external multi-hazard analysis industry application. Section 3 describes the RISMC methodology and toolkit strategy employed in this industry application demonstration, while Section 4 outlines a roadmap, timeline and resources needed for development and implementation of the external events industry application. Lastly, an estimate of planning for the next five years is summarized in Section 5.

1.2 The Risk-Informed Margin Management (RIMM) Approach

As noted, the new tools and methods being developed have a number of applications that support the nuclear industry including, a risk-informed margins management approach. An effective RIMM application is one that balances costs with safety. RIMM will also calculate risk by considering all applicable external hazards together (as shown on the right side of Figure 1); instead of the current approach that separately calculates the risk from external hazards.

The focus on RIMM provides a technical basis to understand and manage hazards. At a nuclear facility, a hazard is a condition that is or causes a deviation in normal operation. Examples of the types of

hazards that may exist at a nuclear power plant (NPP) include different types of kinetic energy (e.g., motion from a seismic event) and potential energy (e.g., energy release by shorted equipment during a flood). These types of hazards complicate the determination of safety in any complex facility. However, in this industry application, we propose advanced methods to represent these potential impacts to safety by developing the technology to incorporate physics (via probabilistic and mechanistic modeling) into scenarios.

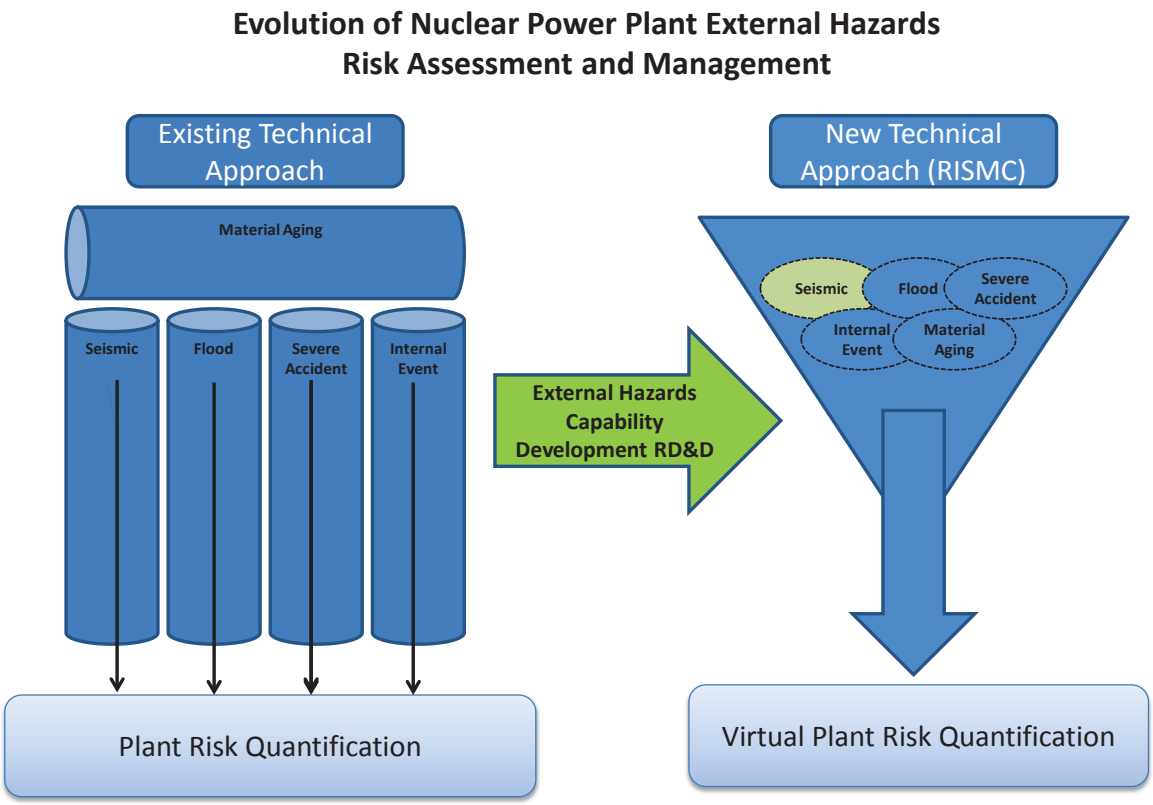

Figure 1. Current Risk Calculation Approach that Generally Considers External Hazards in a Silo versus the Advanced RIMM Approach that Considers External Hazards Together.

A scenario happens when initiating events occur, system control responses (including operator actions) fail, and the consequence severity is not limited as well. External events hazards may impinge on a NPP in several ways:

- They may provide enabling events (conditions that permit the scenario to proceed);
- They may affect the occurrence of initiating events (a departure from a desired operational envelope to a state where a control response is required);
- They may challenge system controls or safety functions;
- They may defeat mitigating systems.

External hazards of interest have a primary impact on the nuclear facility that may also lead to secondary phenomena. Examples of external hazards that cause primary impact are seismic shaking, flooding, and high winds. Examples of secondary phenomena induced by a seismic scenario are dam and levy failure, landslide, internal flood, and internal fire.

A notional depiction of this 3D representation approach is shown in Figure 2. As shown in this figure, different analyses are "layered" in a time based manner depending on their role in a particular scenario. The approach has several defining attributes focused within four general areas:

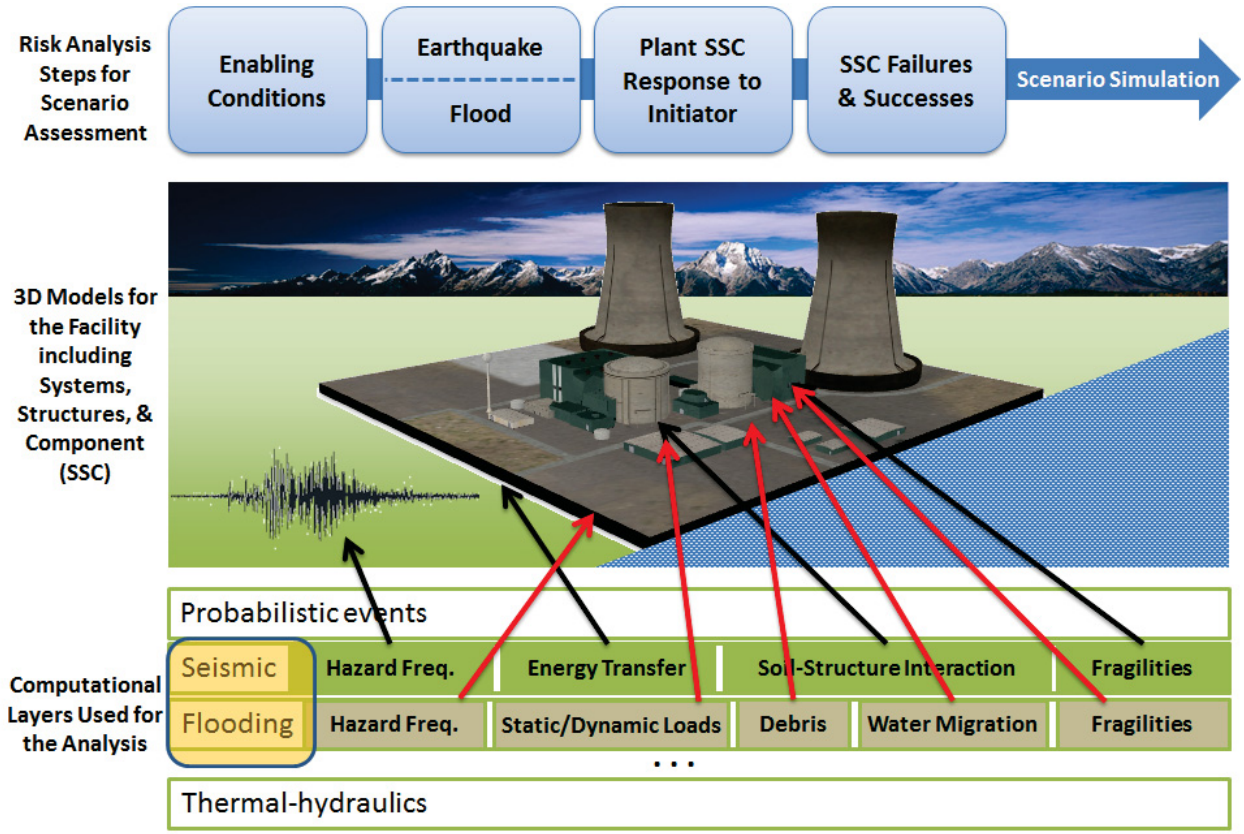

Figure 2. High-Level Features of the External Events Analysis Approach.

1. Enabling Conditions – The enabling conditions are those initial boundary conditions that play a role in defining what occurs (or not) during a specific external events scenario. For example, lack of adequate wall penetration sealers may result in increased flood hazard (and scenarios where water enter buildings via penetrations), while flood doors with proper seals may result in reduced flood hazard (and help to prevent flooding scenarios).
2. Flood Initiating Event Representation – Different types of floods result in a variety of different flooding hazard curves. These hazard curves are models representing the magnitude (how bad) and frequency (how often) of the flooding condition.
3. Plant Response – An approach to effectively representing hazards and their effect on the NPP physical behavior is simulated as part of the simulation. In some cases, multiple models of specific phenomenon may play a role in a sequence. For example, how spatial effects may drive a scenario (e.g., a pipe break caused by a seismic event may flood a pump room) could be determined using different methods for the different risk drivers found in a particular scenario. Impactful conditions on plant to be potentially included in the modeling for multiple NPPs on a site are:

    a. Dynamic forces from water
    b. Debris

c. Scouring of the plant site
d. Migration of water on the plant site

4. Structures, Systems, and Component Impacts – A representation of key SSCs will be modeled within the 3D risk analysis model for a particular NPP. We will be able to use this model to simulate potential hazard-specific susceptibilities (e.g., energy from a seismic event may fail a component, flooding may disable many components in a room). Potential impacts to be modeled include:
    a. Inundation
    b. Spraying
    c. Mechanical insults
    d. Debris issues
    e. Migration of water throughout buildings

In order to enable probabilistic aspects of NPP external events modeling, we are using event simulation as the quantification method. Successfully linking probabilistic simulation to external events physics is a key facet of advanced methods and will directly address problems such as highly time-dependent flooding scenarios.

One of the unique aspects of the RISMC approach is how it couples probabilistic approaches (the scenario) with mechanistic phenomena representation (the physics) through simulation. This simulation-based modeling allows decision makers to focus on a variety safety, performance, or economic metrics. For example, while traditional risk assessment approaches for external hazards attempt to quantify core damage frequency (CDF), RIMM approaches may instead wish to consider other metrics such as:

• Magnitude of the hazard – for example, the height of water on buildings, or the height of water inside strategic rooms. The "magnitude" might be measured (during the simulation) by metrics such as water height, seismic energy, water volume, water pressure, etc.

• Damage to the plant (but not core damage) – for example, we may be interested in scenarios in which the facility does not see core damage, but would still experience extensive (or even minor) damage. The "damage" might be measured (again during the simulation) by metrics such as total number of components failed, cost of components destroyed, structures rendered unusable, the length of time the facility is impacted (hours versus months), etc.

The defining difference between these new RIMM metrics and traditional ones such as CDF is that they represent observable quantities (e.g., the number of components failed, the costs related to the event, the height of water in a room, the duration of the event) rather than just a statistical average of an event frequency. We believe these new metrics that are provided by the RISMC simulation yield enhanced decision-making capabilities for nuclear power plants.

2. Light Water Reactor Models

External natural hazards that impose threat to a nuclear power plant (NPP) can originate at different times and areas, and can be related to each other. We aim to represent these hazards in simulations using realistic model representations of an NPP and hazards to study and understand the effect these external forces impose over time at a given facility.

We define the problem we study as an "industry application," hence the problem we define is a realistic representation of an NPP, including systems, structures, and components (SSCs), and the simulations we propose are of direct interest to an NPP owner and operator.

For the realistic representation of a nuclear power plant, we divide the construction of generic plant models into two major categories: Pressurized Water Reactors (PWRs); and Boiling Water Reactors (BWRs). The description of each reactor model, including soil, structures, components, PRAs, and different physics models are briefly described below.

2.1 The INL Generic Pressurized Water Reactor (IGPWR) Model

This section will include brief discussions of the types of components, structures, soil, PRAs models necessary to execute the Industry Application #2 plan, as outlined in Section 4. For an initial demonstration of seismic induced flooding events for PWRs we need to describe:

- Flooding Models
- T-H
- Seismic (Structural and piping fragilities)
- structural mechanics/dynamics
- PRA
- Geometry, including 3D rooms and piping

2.1.1 Flooding Models

In order to simulate flooding events, a semi dynamic model, capable of interpreting some parameters for the event, must be constructed. The format or content of this model is dependent upon the tool that will be used to simulate the flooding event. Currently there is no common format can be used for multiple simulation software packages.

For flooding events in the generic model we will be using Neutrino, a Smooth Particle Hydrodynamics (SPH) physics based tool. Although Neutrino has custom data for things like particle emitters and measurement fields, it uses common 3D formats for the rigid body structures. The 3D models constructed for the generic PWR will be used as the rigid body structures for the neutrino flooding model.

In addition to the physical structures, the flooding model will contain different types of particle emitters. To simulate a pipe failure a particle emitter will be dynamically created with a given location, orientation, and flow, corresponding to the location and the failure data of the pipe break. A dike failure can be simulated using variable particle emitter at a given location with an erosion model.

The initial demonstration model will consist of two models, an overall site model with terrain and an internal model of a few key rooms. The site model will have an above ground level cooling source with a retaining wall capable of simulating a breach. The internal model will have piping structures and a capability to simulate pipe ruptures and flooding. This will be the first step in developing a generic flooding model.

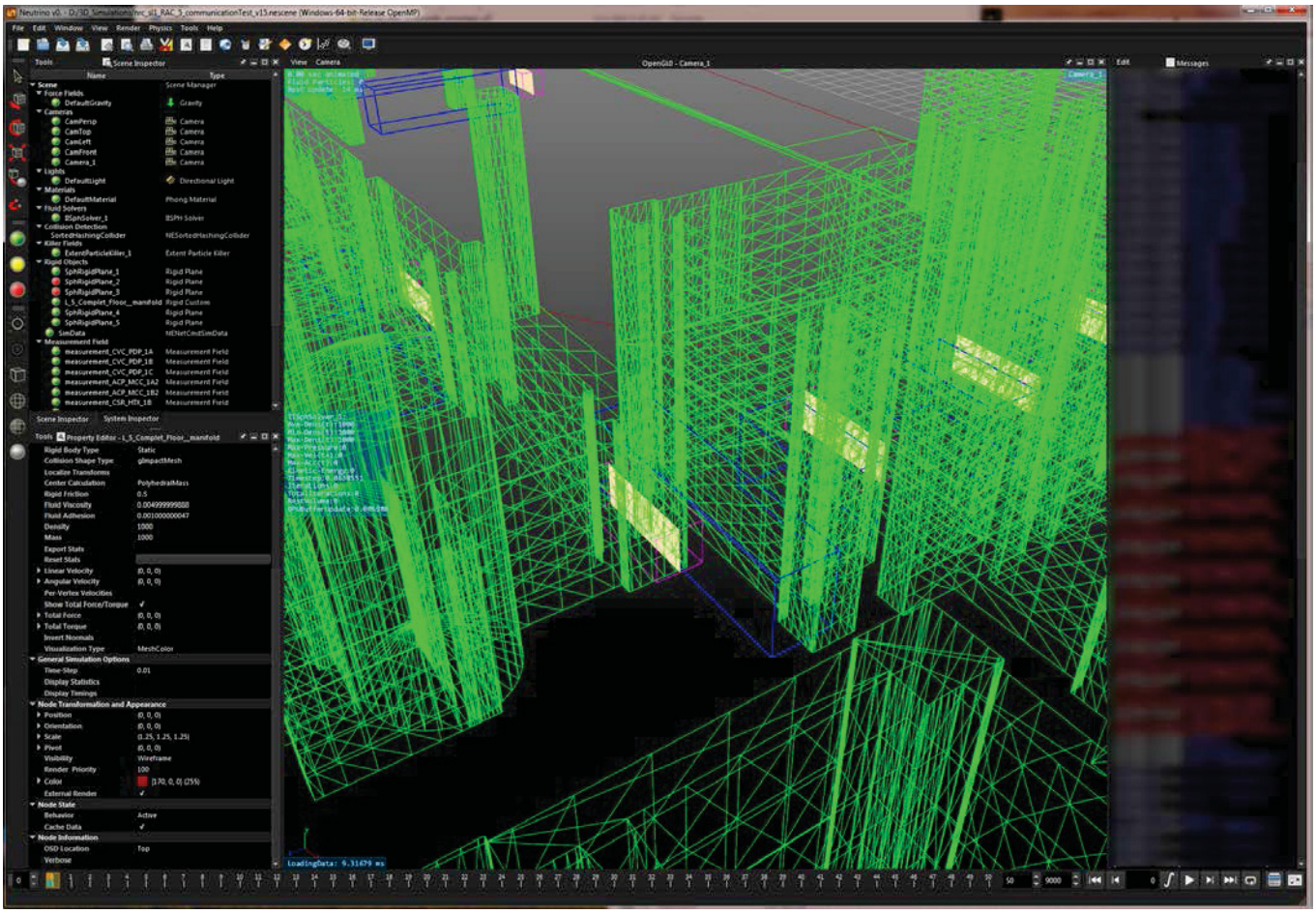

Figure 3. User Interface for Neutrino.

2.1.2 Seismic Models

The Advanced SPRA (A-SPRA) development activity focuses on a new set of tools and methods within the RISMC technical pathway to perform A-SPRA. These tools and methods are implemented within the MOOSE solver framework and would make use of existing and newly developed tools and methods, coupled with the experience and data gained in the past decades, to define and analyze more realistic risk assessment models. Development of these advanced tools is being guided by sensitivity studies using baseline numerical tools such as LS-DYNA.

The steps in A-SPRA are shown in Figure 4, along with their relationship to other RISMC elements such as flooding. External event PRA is composed of three general elements: hazard assessment, fragility relationships, and systems analysis. SPRA also has the element of soil-structure-Interaction analysis, which couples the rock hazard at the sites to the in-structure motions experienced by the systems and equipment within the NPP. The fragility of the structure itself is also important for assessment of the potential for early release into the environment. The new tools and approaches developed in this project cover the many steps in a SPRA in a more cohesive approach that could reduce interface issues and more accurately track uncertainties throughout the process. The methods developed would move away from the use of peak ground acceleration to incorporate parameters of most significance to response to earthquake ground motions. By tracking uncertainties more seamlessly and rigorously throughout the process, and using physics-based tools to investigate scenarios of interest that have traditionally been left out of SPRA (e.g., seismically-induced fire and flood), the new tools would provide more accurate models with a clearer view of uncertainties.

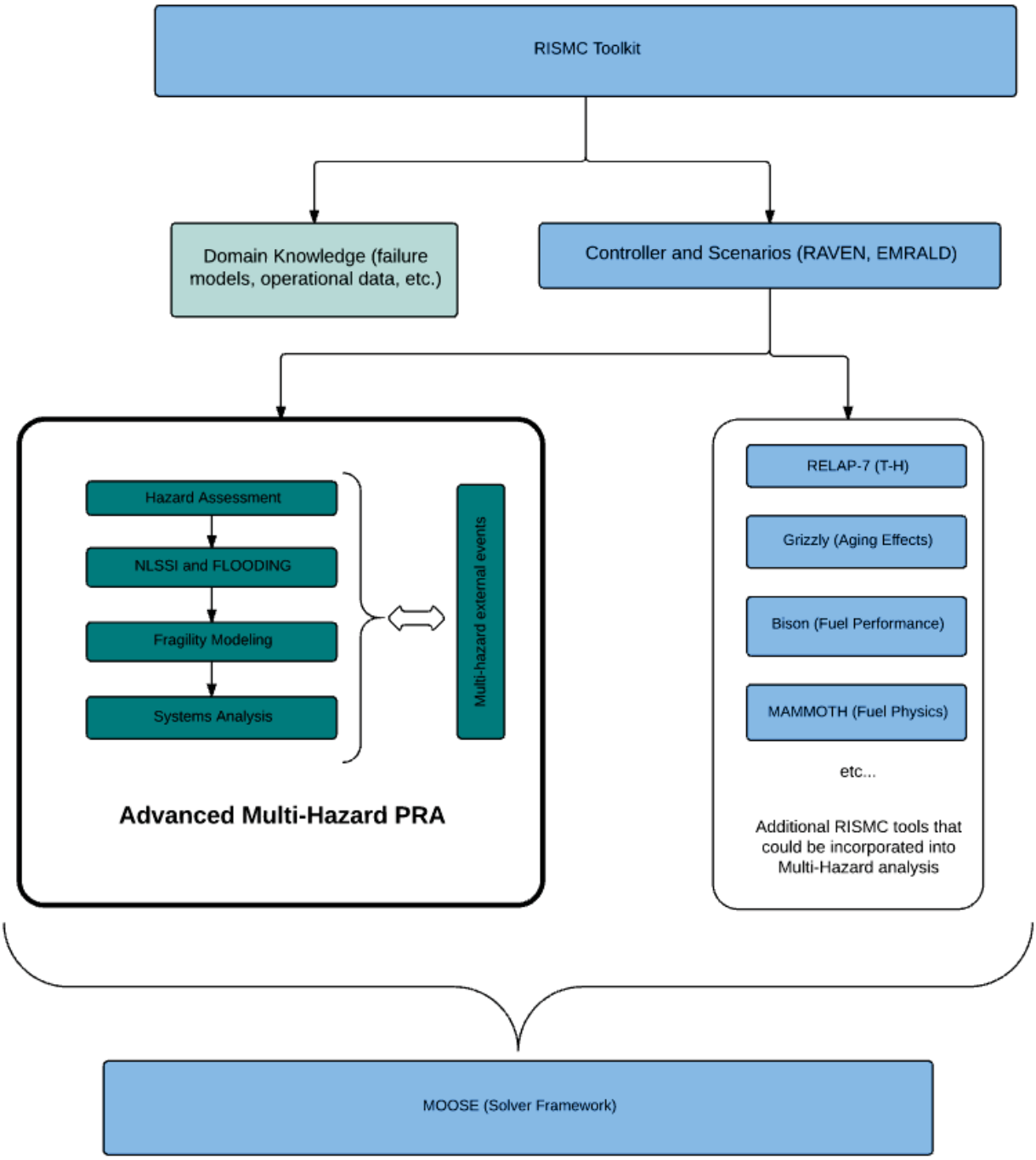

Figure 4. Integration of Advanced SPRA and Internal and External Flooding in the Larger RISMC Program.

Development of a set of tools and methods to replace the existing SPRA is the first focus area of a multi-phase project (focus area 1). Focus area 2 would also develop new tools to address two important areas of current research in SPRA, namely seismically-induced fire and flood. Focus area 2 feeds into the tools created in focus area one by developing methods and protocols to use various physics-based dynamic tools available in the RISMIC toolkit to investigate issues and uncertainties in the systems model

for facilities being analyzed. The first phase activities would identify areas in which efficiencies are found and/or further developing methods based on ongoing use of the tools and methods.

An initial activity was completed in FY 2015 that implemented results from nonlinear SSI results into SPRA calculations. This advanced SPRA activity used LS-DYNA which is considered a baseline toolset. Results from that effort show the assumption the in-structure response scales linearly with increasing ground motion is not a reasonable assumption for the specific problem solved (see Figure 5). For the initial IA #2 effort this approach will be used for the seismic modeling.

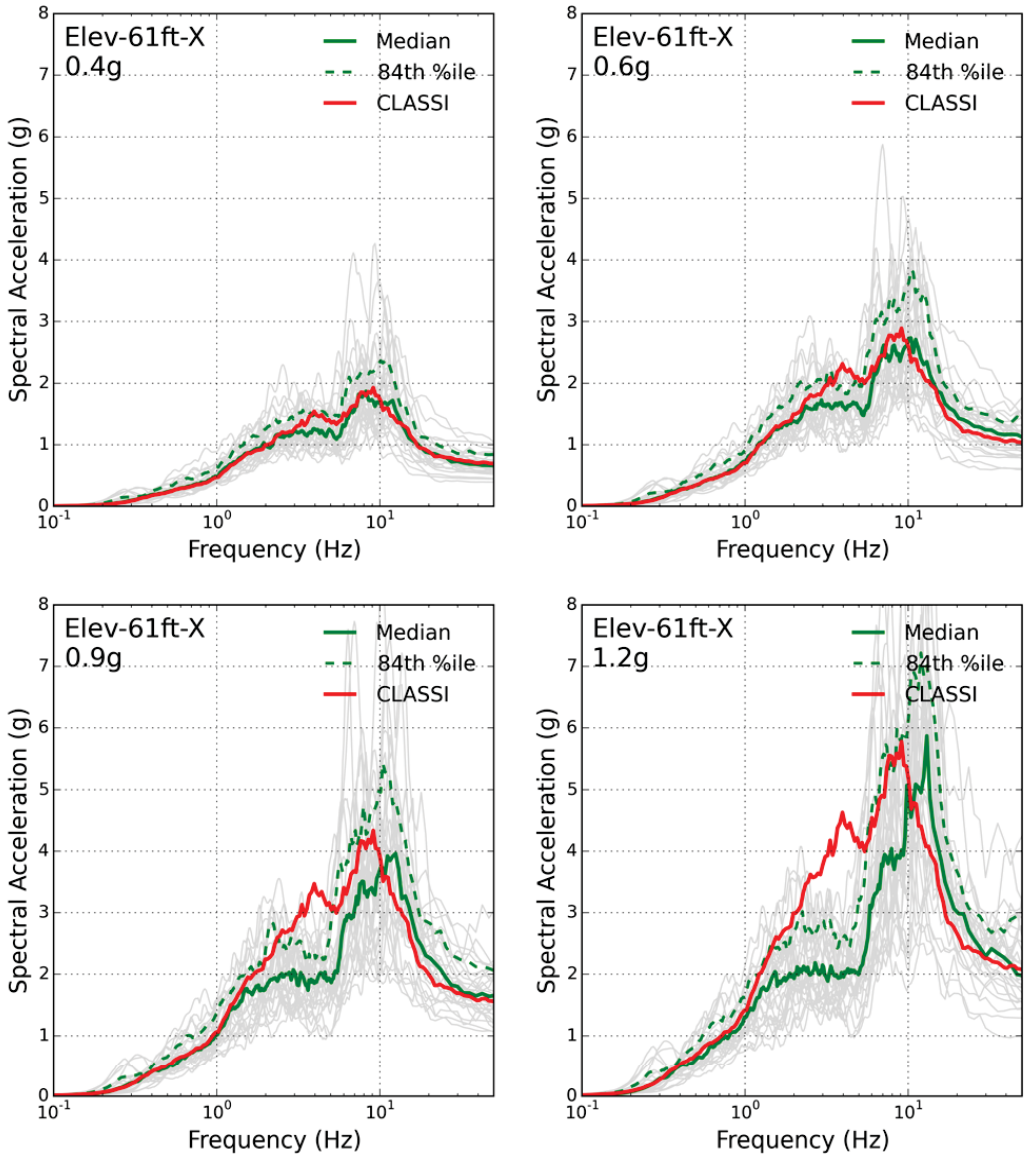

Figure 5. Results Comparing Linear versus Nonlinear Analysis at Different Levels of Shaking at a Point In-Structure.

The advanced seismic toolset is being developed in a MOOSE based application, MASTODON. This advanced tool can be coupled with other physics in MOOSE. Figure 6 shows the advanced seismic tool coupled with other MOOSE-based applications.

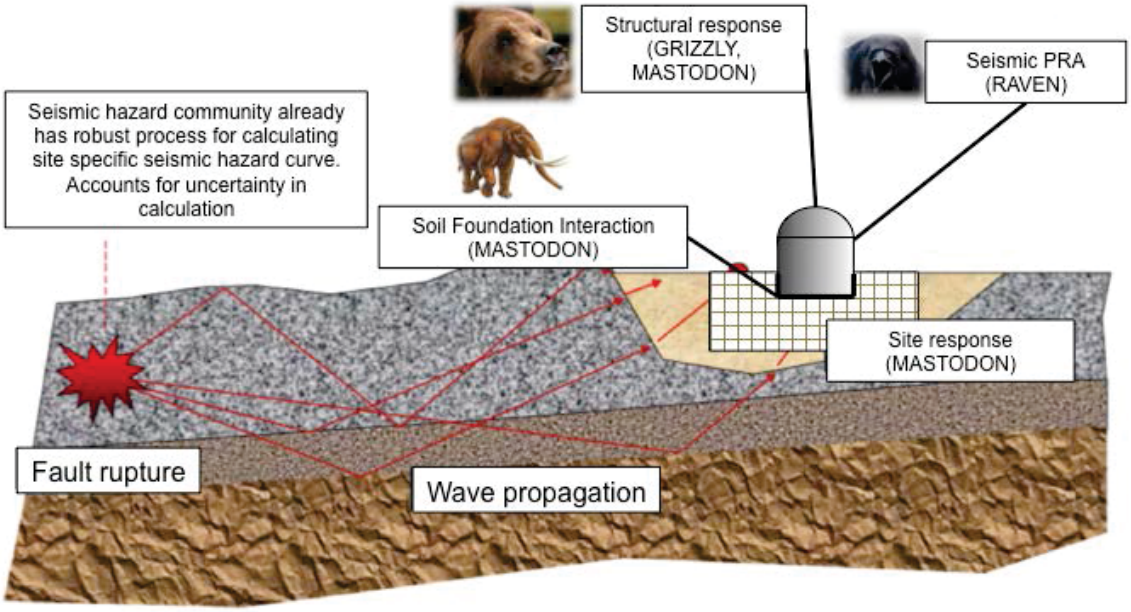

Figure 6. Advanced Toolset MOOSE-Based Applications.

An example of coupling MASTODON with another MOOSE-based application, BISON, is shown in Figure 7. MASTODON provides best estimate seismic response and reduction of uncertainty. In this IA #2 application this will allow for a realistic estimate of piping response to determine when and where internal flooding may be an issue.

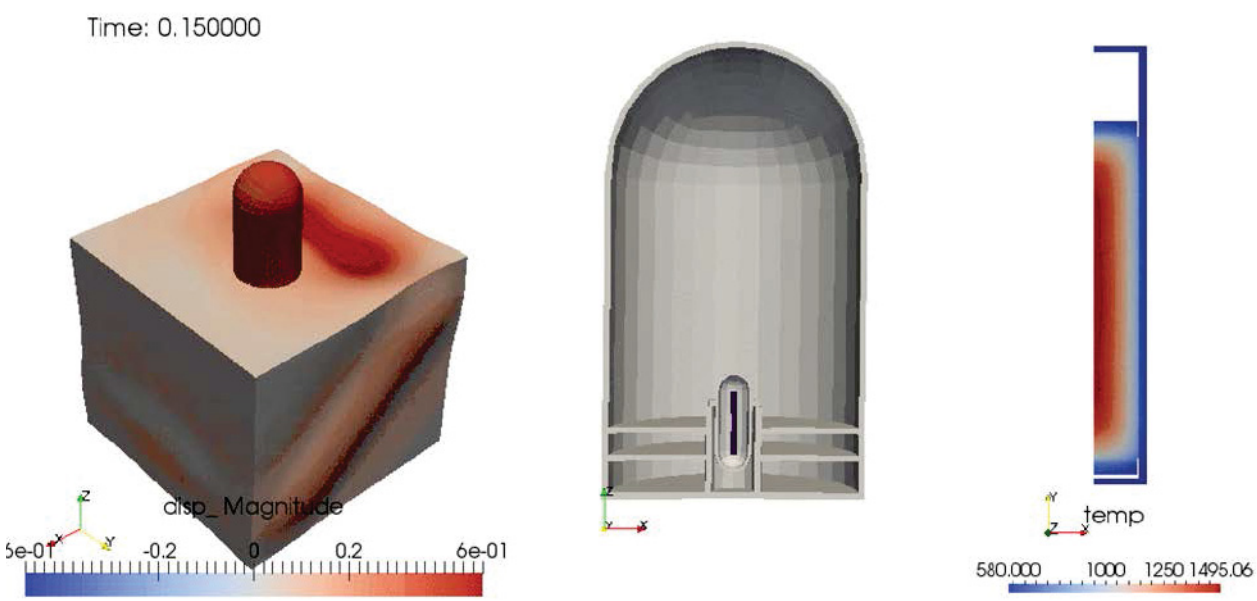

Figure 7. MASTODON Coupled with a BISON Demonstration Problem of Inclined Wave Propagation and Seismic Effects on a Nuclear Fuel Rod.

INL is proposing to use a combination of an NPP soil site, an NPP not physically sited on the selected soil site, and a seismic hazard (one east coast, and one west coast seismic hazard) that is not related to the soil site nor NPP (See Figure 8). IA #2 will use publically available information for these demonstrations, as it is described in this Section.

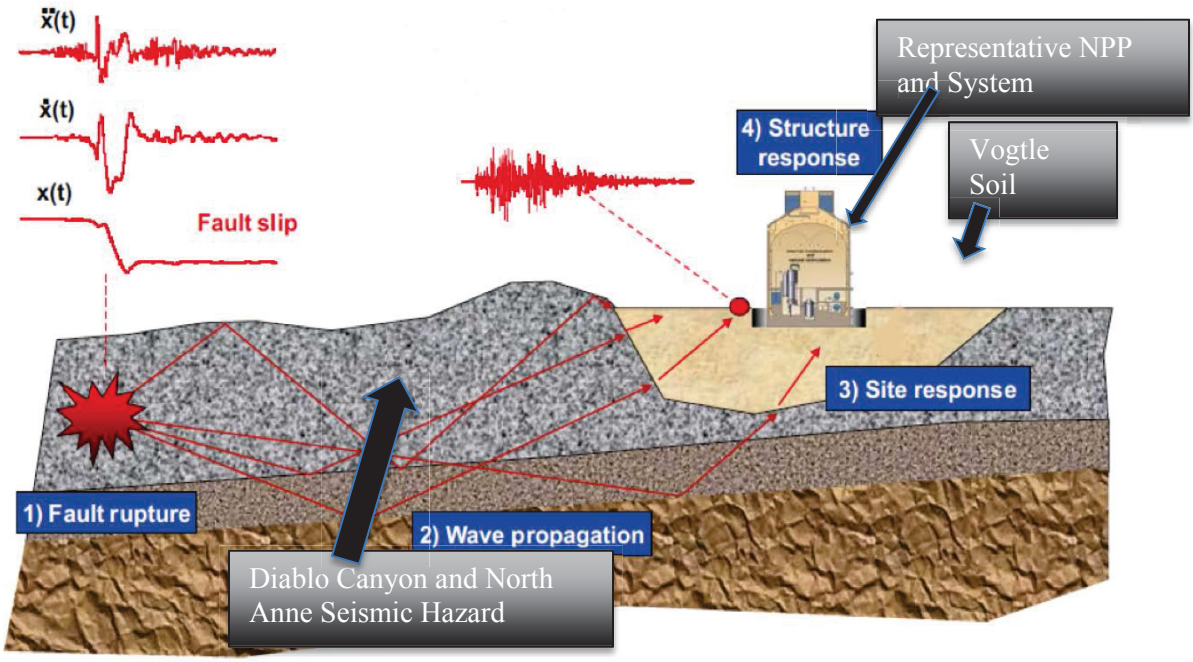

Figure 8. Representative Industry Application.

2.1.3 Deterministic Systems Models

2.1.3.1 Scope

The deterministic models of the IGPWR have the ultimate scope of evaluating the safety margins or the possible damages for the main fission products barriers (fuel clad, primary circuit, and containment) during Design Basis Accidents (DBA) and Beyond Design Basis Accidents (BDBA) conditions. The determinist models have to be able to evaluate how the fundamental safety functions (FSFs) of the IGPWR, or:

- the control of reactivity;
- the removal of heat from the core;
- the radioactivity confinement,

are effective in limiting/controlling the possible damages to the barriers. In the following paragraphs, a description of those models, developed for EE analysis, is presented. Future developments are outlined as well.

2.1.3.2 Main system

The backbone of the IGPWR model is being based on a system code (e.g., RELAP5-3D code) input deck of a Westinghouse 3-loop PWR. The base model will be able to simulate the thermal-hydraulic parameters (e.g., pressure, temperatures, mass flows, etc.) of the primary side and of some parts of the secondary side. The base model could be expanded for including other parts of the plant and could be easily coupled with other tools (e.g., containment and fuel mechanics code, see further) for multi-physics/multi-scale safety analyses. The important design parameters of the IGPWR are reported in Table 1.

Table 1. Design Parameters of the IGPWR.

Parameter	Value (SI units)	Value (British units)
Core Power [MW_{th}]	2,546	
Reactor Inlet / Outlet Temperature [^oC / ^oF]	284 / 320	543 / 608
Number of Fuel Assemblies	157	
Rod Array	15x15	
RCS Coolant Flow [kg/s / lb_m/hr]	12,687	1.007E+8
Nominal RCS Pressure [MPa /psia]	15.5	2,250
MCP seal water injection [m^3/s / gpm]	3.78E-3	8
MCP seal water return [m^3/s / gpm]	1.42E-3	3
MCP Power [MW / hp]	5.22	7,000
Number of SG	3	
PRZ PORV set points op./clos. [MPa / psig]	16.2 / 15.7	2,350 / 2,280
PRZ PORV capacity [kg/s / lb_m/hr]	2 x 22.5	2 x 179,000
PRZ SV set points op./clos. [MPa / psig]	16.4 / 17.7	2,375 / 2,575
PRZ SV capacity [kg/s / lb_m/hr]	3 x 37.0	3 x 293,330
Relief Tank Rupture Disc capacity [kg/s / lb_m/hr]	113.4	9.0E+5
Relief Tank Rupture Disc set point op. [MPa / psid]	6.89	1000
Relief Tank Total Volume [m^3 / ft^3]	36.8	1300
Relief Tank Water Volume [m^3 / ft^3]	25.5	900
SG PORV capacity [kg/s / lb_m/hr]	1 x 47.0	1 x 3.73E+5
SG PORV set points op./clos. [MPa / psig]	7.24 / 6.89	1,050 / 1,000
SG SV capacity [kg/s / lb_m/hr]	5 x 94.0	5 x 7.46E+5
SG SV set points op./clos. [MPa / psig]	8.16 / 7.53	1,184 / 1,092
Secondary Pressure [MPa / psia]	5.49	796
Secondary Side Water Mass @ HFP [kg / lb_m]	43,998	97,000
SG Volume [m^3 / ft^3]	166	5,868

SG Steam Flow rate @ HFP [kg/s / lb_m/hr]	462	3.67E+6
FW Temperature [^oC / ^oF]	221	430
Main FW pump [m^3/s / gpm]	2 x 6.513 (at 518 m)	2 x 13,800 (at 1,700 feet)
Turbine-driven AFW pump [m^3/s / gpm]	1 x 0.3304 (at 832 m)	1 x 700 (at 2,730 feet)
Motor-driven AFW pump [m^3/s / gpm]	2 x 0.1625 (at 832 m)	2 x 350 (at 2,730 feet)
Emergency Condensate Storage Tank [m^3 / ft^3]	416	14,691
Accumulator Water Volume [m^3 / ft^3]	3 x 27.61	3 x 975
Accumulator Pressure [MPa /psig]	4.14-4.59	600-665
High Head Safety Injection [m^3/s /gpm]	3 x 0.0708 (at 1,767 m)	3 x 150 (at 5,800 ft)
Low Head Safety Injection [m^3/s /gpm]	2 x 1.416 (at 68.6 m)	2 x 3,000 (at 225 ft)
Containment Volume [m^3 / ft^3]	50,970	1,800,000
Containment Design Pressure [MPa /psig]	0.31	45
Containment Operating Pressure [MPa /psia]	0.062 to 0.071	9 to 10.3
Containment Operating Temperature [^oC / ^oF]	24 to 52	75 to 125
RHR Pump capacity [m^3/s /gpm]	2 x 1.888 (at 70.1 m)	2 x 4,000 (at 230 ft)
CCW Pump capacity [m^3/s /gpm]	2 x 4.248 (at 61.0 m)	2 x 9,000 (at 200 ft)

The main components of the primary and the secondary sides that are included in the base model are:

- the reactor pressure vessel (RPV);
- the three main circulation circuits (MCC), including the main coolant pumps (MCP) and the steam generators (SG);
- the pressurizer (PRZ), and its main valves (PORV and SV);
- the connections for the emergency core cooling system (ECCS) and the auxiliary feed-water (AFW);
- the secondary part of the SGs up to the SG outlet, including the main valves (PORV and SV);
- the main feed-water (MFW).

The sketches of the RPV and of the MCC, including the secondary side of the SGs, are given in Figure 9 and Figure 10.

Three independent TH channels representing the central, the middle and the periphery of the core are used. A sketch of the three-channel core region subdivision is given in Figure 11, together with the number of the fuel assemblies and their relative radial power.

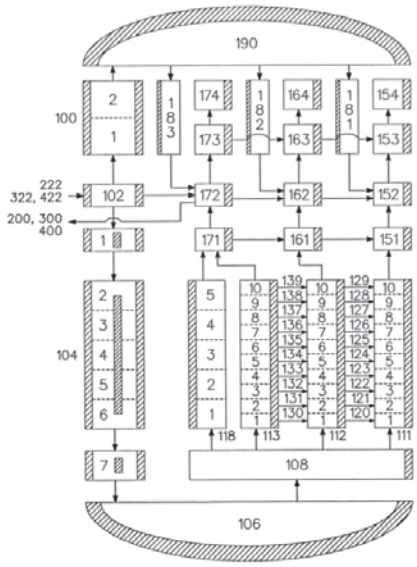

Figure 9. RELAP5-3D RPV Model.

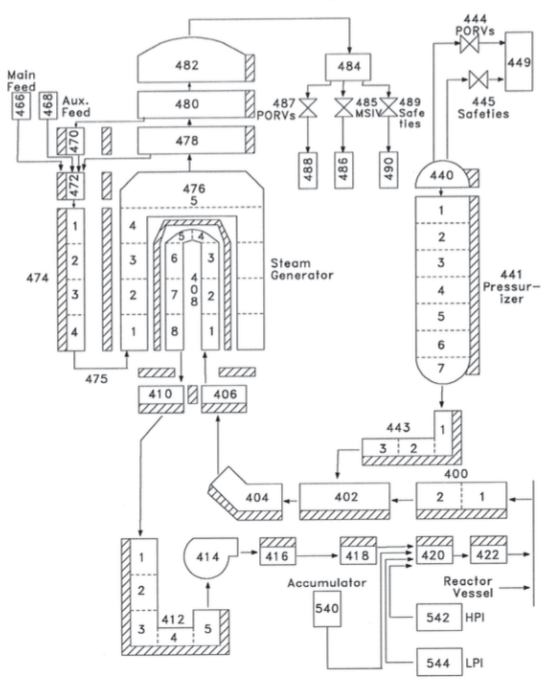

Figure 10. RELAP5-3D MCC & SG Model.

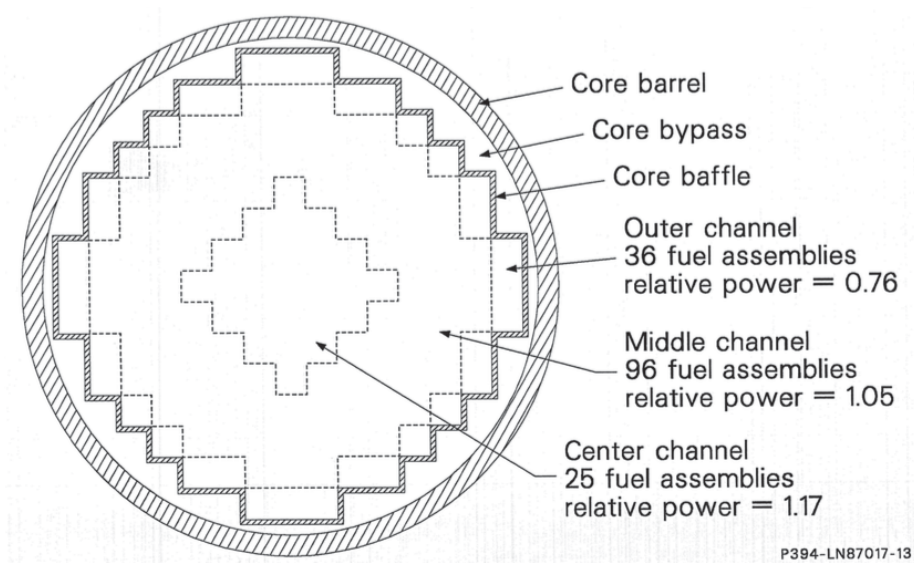

Figure 11. RELAP5-3D Core Model.

The model proposed above can be developed using the RELAP5-3D system code. RELAP5-3D is capable of performing the analysis of the most probable class of accidents induced by EE-EQ, i.e. Station blackout (SBO) with an immediate loss of AFW. The model could also be modified for studying the other most probable class of EE-EQ initiated accidents (MCP seals LOCA).

These events can be studied by system codes until the onset of the fuel damage conditions, thus allowing the estimation of the required Figure-of-Merit (the Core Damage Frequency, CDF). Studying significant core degradation scenarios (i.e., severe accident, SA) requires a system code coupled with SA codes (e.g., RELAP5-SCDAP) or the use of other integral SA tools (e.g., MELCOR or MAAP5 codes).

2.1.3.3 Engineered Safeguards

As reported in the previous paragraph, the most probable EE-EQ induced accidents for an IGPWR are two classes of accidents:

1) Loss of Off-Site Power (LOSP) + Loss of AFW + Failure of Core Feed & Bleed caused by
    a. Loss of Emergency Diesel Generator (EDG) → Station Black-out (SBO) + Battery Depletion
        OR
    b. EQ-induced failure of Condensate Storage Tank (CST) + PORV failures

2) LOSP + EQ-induced loss of High Pressure Injection System (HPIS) + loss of Component Cooling Water System (CCWS) →loss of MCP seals cooling → LOCA
    a. Loss of HPIS caused by
        i. Loss of RWST
            or
        ii. EDG load panels failure
    b. Loss of CCWS by
        i. EQ induced Loss of EDG
            or
        ii. CCWS Heat Exchangers support failure

The above transients imply the modeling of the engineered safeguard systems (ESF). A sketch of the IGPWR ESF is reported in Figure 12. Important parameters of the main ESF systems are given in Table 1.

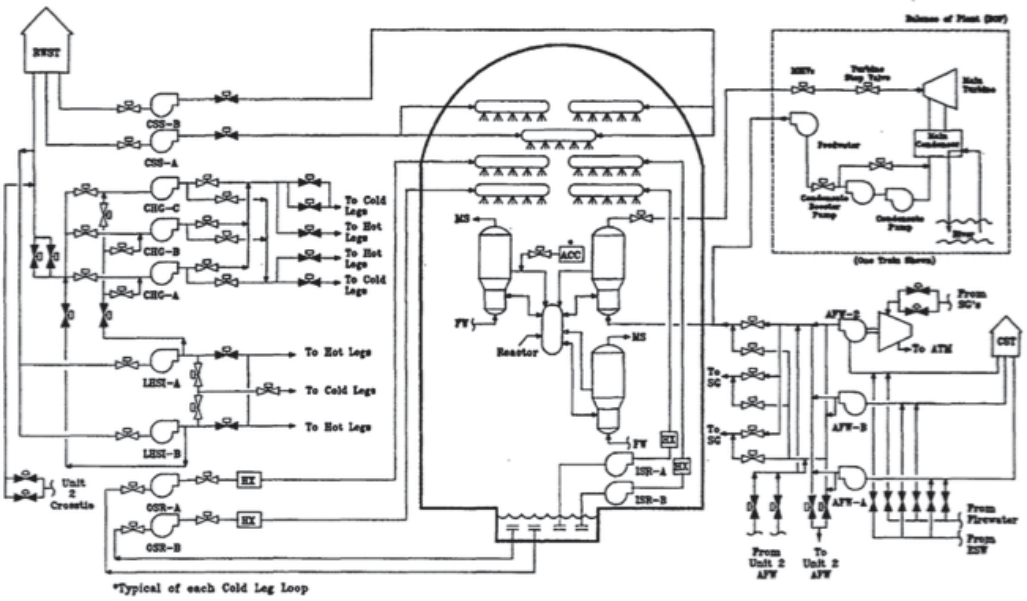

Figure 12. IGPWR ESF.

The ESF systems can be modeled in details or using a zero-dimensional approach (i.e., imposing their effects as a time-dependent boundary condition). ESF systems involving the containment feedback (e.g., the containment spray system) require the use of a special system-code modeling technique, or a dedicated tool like the GOTHIC code.

2.1.3.4 Containment

The containment, along with the ESF system, has the function of containing and limiting the radiation doses outside a NPP. For the IGPWR, large dry steel-lined reinforced concrete containment was chosen. The main characteristics of the IGPWR containment are reported in Table 1. This containment concept operates at sub-atmospheric pressure (between 0.062 and 0.071 MPa, or 9 and 10.3 psig) and it returns to sub-atmospheric pressure within 60 minutes after a DBA through the use of multiple spray systems. In this way, a positive termination of out-leakage of fission products can be achieved.

A sketch of the IGPWR sub-atmospheric containment is shown in Figure 13. Detailed containment modeling requires the use of specialized codes, eventually directly coupled with the system code (RELAP5-3D) for simulating the energy and mass exchange, e.g. with the primary system during a LOCA or with the secondary system during a MSLB accident.

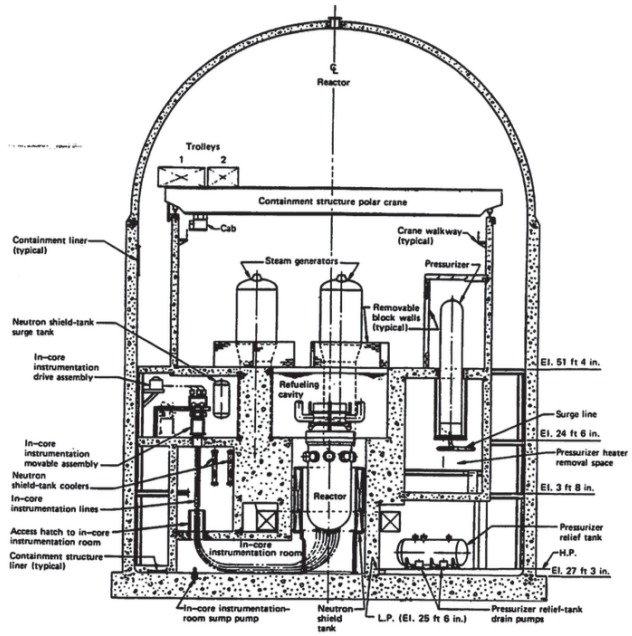

Figure 13. IGPWR Sub-Atmospheric Containment.

2.1.3.5 Balance-of-Plant and Auxiliary components

The secondary side outside the containment (i.e., the balance-of-plant, BOP) and the auxiliary systems (e.g., the residual heat removal system, RHRS, or the CCWS) are not being considered during the first year of activities. However, they could be included in the future activities if new classes of accident are to be analyzed, e.g., loss of RHRS/CCWS by flooding events during refueling operation. A sketch of the BOP, of the RHR and of the CCW systems is given in Figure 14, Figure 15 and Figure 16, respectively. Important parameters of the BOP, of the RHRS and of the CCWS are reported in Table 1. BOP components and auxiliary systems can also be modeled using a standard system code (e.g., RELAP5-3D).

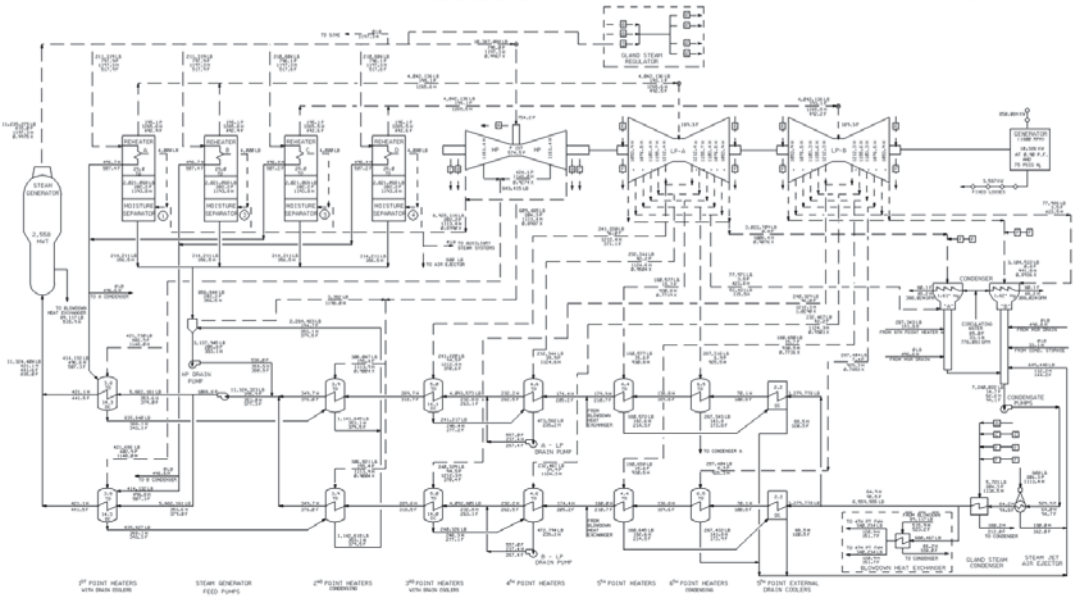

Figure 14. IGPWR BOP Scheme.

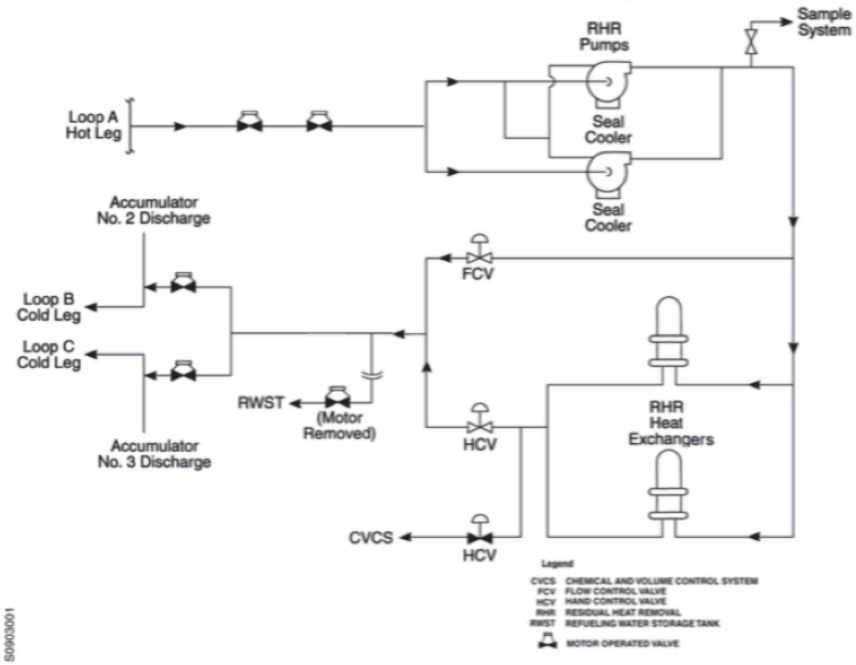

Figure 15. IGPWR RHR System Scheme.

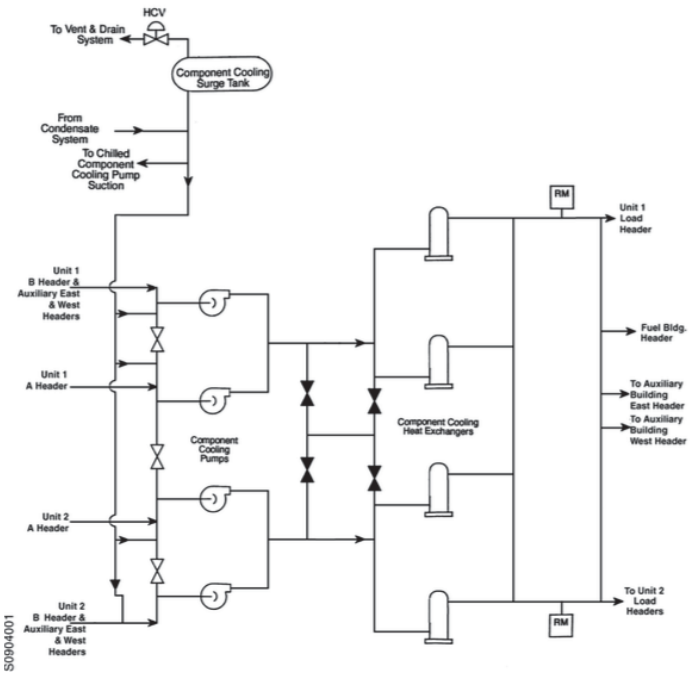

Figure 16. IGPWR CCWS Scheme.

2.1.4 PRA Models

Two PRA models will be developed, a traditional fault tree based model and a dynamic event driven model.

2.1.4.1 Traditional PRA Model

A basic Generic PRA model will be developed using SAPHIRE. Initially this model will contain the systems necessary for analyzing those areas affected by the seismic and flooding scenario. Other systems will initially be stubbed out and added trough the IA2 lifespan. This model will contain the failure methods and rates for key components and provide a baseline result.

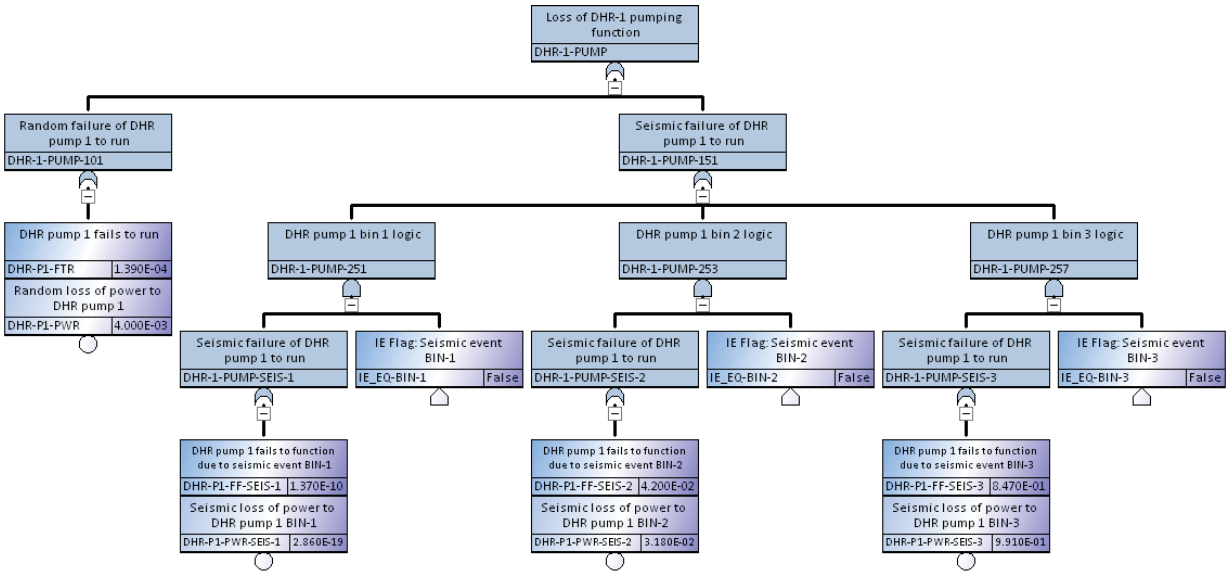

Figure 17. An Example of a Fault Tree for a Pump with Affected by Several Failure Methods Including Seismically Induced Failures.

Seismic effects will be included using bins with different failure rates for varying levels of earthquake events. These rates will be provided by the seismic model in section 2.1.2. House events are used to turn on the correct seismic failure probability for each event. Since there is very little empirical data for component failure rates due to seismic events, arbitrary but logical values will be used. This will due for demonstration purposes, and as more data is compiled, more accurate values can be applied.

2.1.4.2 Dynamic PRA Model

Traditionally PRA models consist of Basic Events, Fault Trees and possibly Event Trees. These models can very accurately determine the failure probability for complex system but they are static, not able to deal with changes over time. A dynamic model is needed in order to deal with component failures and interact with other analysis methods over time.

EMRALD is a dynamic simulation based PRA code based on three-phase discrete event simulation. These phases include the following.

0. Setup – Add initial start states.
1. If sifted to a new state do the following, else go to step 2.
   a. If terminal state then quit.
   b. Execute the state's immediate actions.
   c. Process the state's event actions by adding conditional events to the lookup list or calculating the next occurrence of a probabilistic item and add it to the next event Que.

2. Execute any conditional events that have their criteria met, go to step 1 if any states changed.
3. Jump to the next event in the chronological event Que and process the events actions. Then go to step 1.

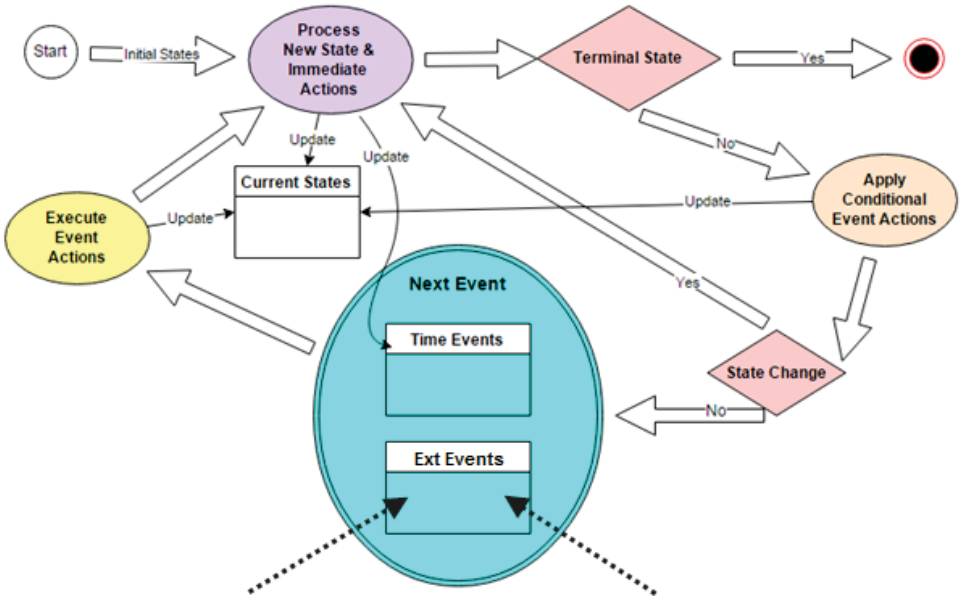

Figure 18. Flow Diagram for Processing and EMRALD Model.

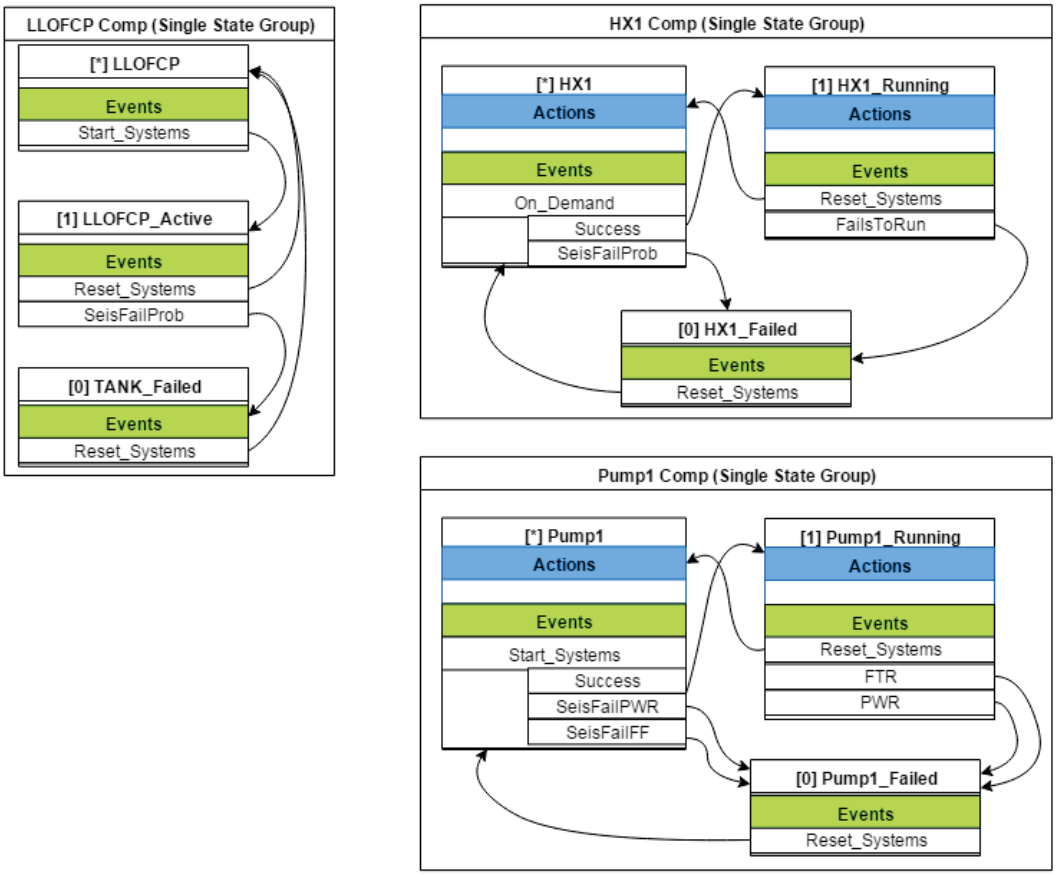

Figure 19. Example of EMRALD State Diagrams for Several Components and their State Changes.

The model for EMRALD consists of States with immediate actions, and conditional event actions. Many different types of events and actions can be evaluated or executed, designed in a way for easy equivalents to items in traditional PRA such as basic events and fault trees. States can also be tagged as "key states" and are noted if a simulation run ends on that state. Through multiple runs of the simulation model, probabilities of a given key state are given, similar to end states results in SAPHIRE. In addition, heuristics can be made to show the path or cause of the key state and the times of those events.

A traditional PRA model can be converted into an equivalent EMRALD model with statistically equivalent results. The PRA model described in section 2.1.4.1 will provide a map for easy construction of the EMRALD model and be used for a baseline result comparison. In addition to providing standard probabilistic results and time based heuristics, EMRALD can send and process data or messages to and from external codes. By allowing external evaluation of the current states and values and having those results affect events and actions inside of the EMRALD simulation, it becomes a very dynamic and versatile PRA tool. This is how initial coupling between a PRA model, 3D simulation and thermal hydraulics evaluation will be achieved.

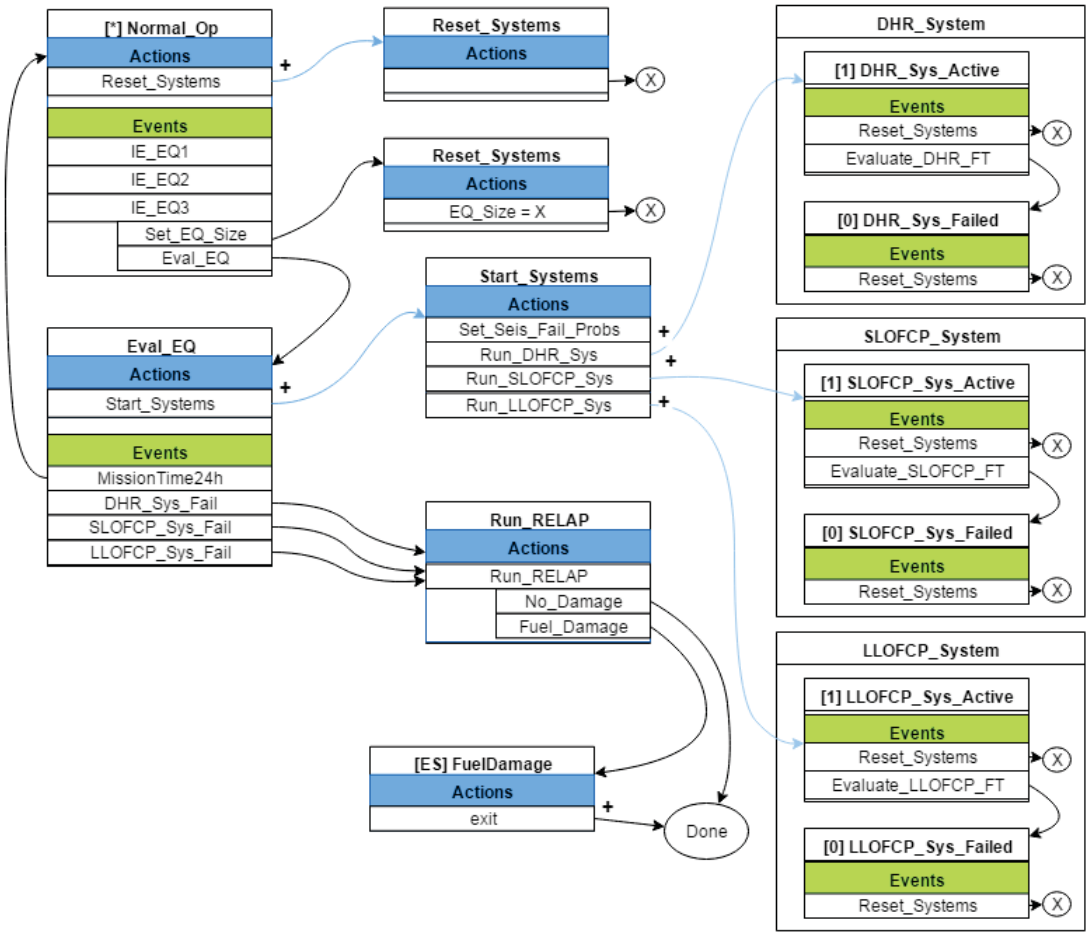

Figure 20. Example of an EMRALD Plant Response State Diagram Executing and Evaluating RELAP Results.

2.1.5 Plant Spatial Models

SC Solutions is developing a 3D spatial model to allow INL to translate seismically-induced piping failures to assessment of internal flood scenarios.

The spatial model being developed represents a switchgear room and adjacent battery rooms in the Service Building of a representative/generic 3-loop PWR. The switchgear room and adjacent battery rooms contain critical and sensitive electrical equipment, such as 4kV and 480V switchgear/bus, MCC/controls, batteries, and breakers. These components provide DC power to safety systems required for safe shutdown following a seismic event, notably the auxiliary feedwater (AFW) and high pressure injection (HPI) (i.e. Charging) systems. These rooms have an integrated overhead water-based fire suppression system. Postulated seismically-induced failure of the fire suppression system (i.e. failure of piping, sprinklers, threaded/welded connection, etc.) could cause spray that directly affects electrical equipment, or could cause water accumulation that affects electrical equipment. The spatial model being developed is intended to support simulation of this seismically-induced flood scenario.

We outline a preliminary in-progress draft spatial model of the subject rooms with certain component outlines. As an example, we also describe model file format and content to ensure import compatibility to the MOOSE framework for future seismically-induced flood scenario simulations.

2.1.5.1 Model Development

A three-dimensional (3D) spatial model of the fire protection system in a sample plant Service Building is currently being developed. The following describes the features of this in-progress 3D spatial model.

<u>Structural components: Service Building bottom floor (from El. 730’-6” to 745’-6”)</u>
The in-progress spatial model contains modeling of the following structural components:

- Floor slab at El. 730’-6”
    - sump pump pit and main steam pipe chase open to floor slab at El. 745’-6”
- Floor slab at El. 745’-6”
- Interior and exterior walls
    - Including locations of doors (assumed closed)
- Ramps at two sides of the Service Building

<u>Equipment: Fire protection piping, switchgear, batteries in 4 battery rooms, and related safety equipment</u>
The in-progress spatial model contains modeling of the following equipment:

- 4 sets of batteries in the 4 battery rooms
    - 2 sets of 2 rows of batteries in each room
- 4KV-2-AE: 11 section medium voltage switchgear
- 4KV-2-DF: 11 section medium voltage switchgear
- 480VUS-2-8: 19 section low voltage switchgear
- 480VUS-2-9: 18 section low voltage switchgear

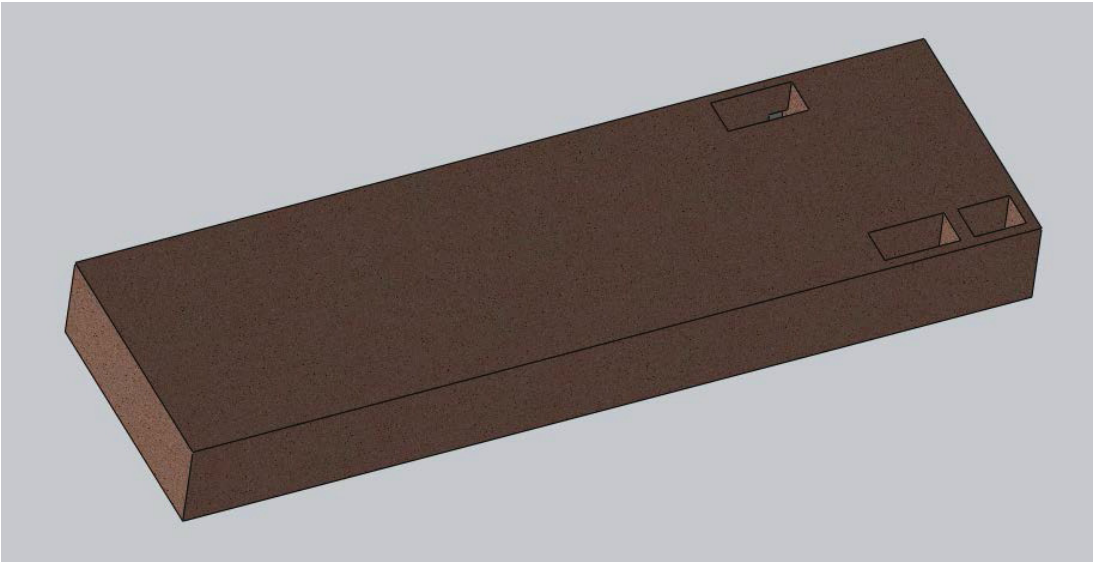

Figure 21. Top View (Floor Slab with Shaft Openings to the Bottom Floor).

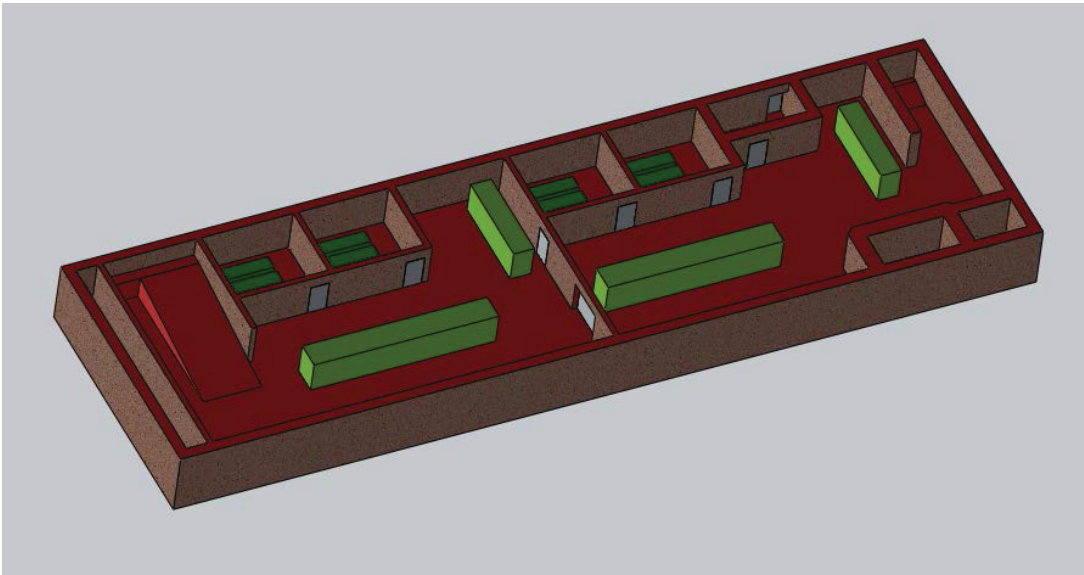

Figure 22. Same Top View without the Floor Slab, with Green Color Indicating the Batteries and Switchgear.

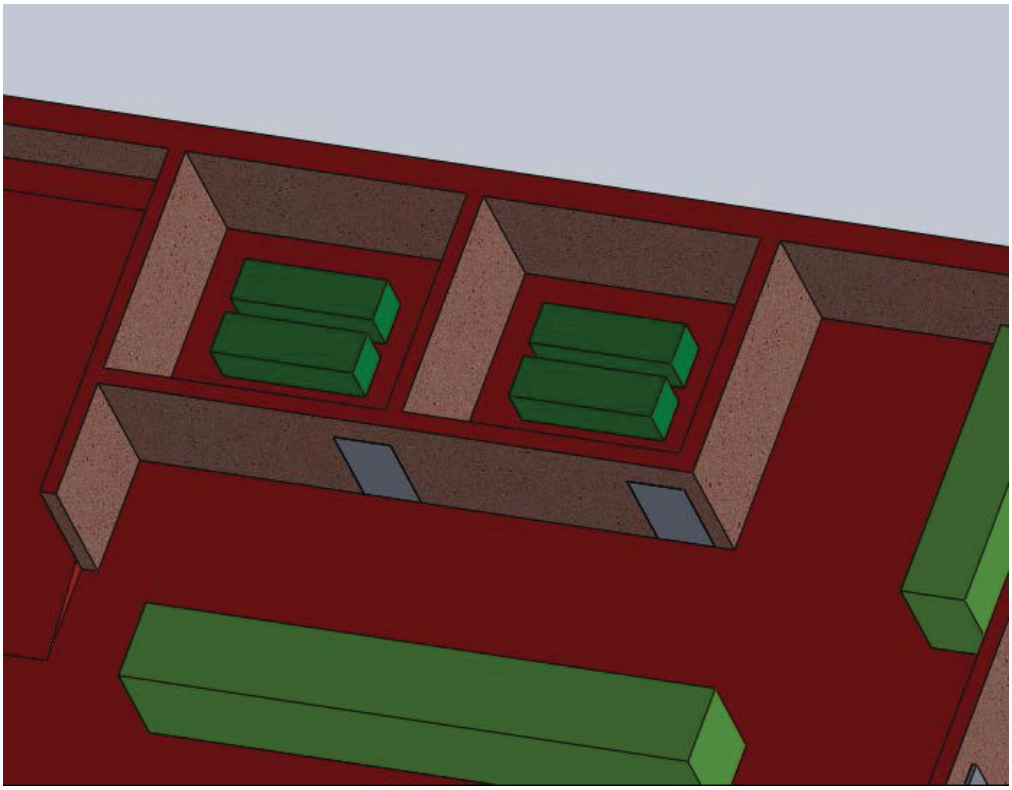

Figure 23. Zoomed In View of Batteries in Battery Room. Each Green Battery Block Represents 2 Rows of Batteries for a Total of 4 Rows of Batteries per Battery Room.

An example of SolidWorks representative models is shown in Table 2.

Table 2. An Example of SolidWorks .STL Files.

Filename	Description
INL-LWRS-3DSpatialModel-Prelim.STL	Global 3D spatial model with components as described in Section 2 between elevations 730'-6" to 745'-6"
floor_slab_El730-6.STL	Floor slab at elevation 730'-6"
floor-slab_EL745-6.STL	Floor slab at elevation 745'-6"
all_walls.STL	All interior and exterior walls between elevations 730'-6" and 745'-6"
all_equipment.STL	All equipment located on floor slab elevation 730'-6" or mounted on walls between elevations 730'-6" to 745'-6"
all_door.STL	All doors located on floor slab elevation 730'-6" or mounted on walls between elevations 730'-6" to 745'-6"

2.1.5.2 Piping – Fragility Models

Piping fragility models are being developed to determine the probable location of a significant break in the NPP system during an earthquake. These piping fragility models were determine where and when to call the flooding analysis models.

The widely used lognormal model of structural fragility cannot be directly extended to the piping and secondary systems due to the lack of sufficient existing fragility data. Furthermore, characterization of the structural performance in terms of an "acceleration capacity" is quite simplistic and in many cases far from the "true performance" especially as the higher mode effects and mass interaction with the supporting structure tends to be significant in piping systems. Many researchers have evaluated seismic fragilities using experimental data either independently or in conjunction with experimentally validated finite element models. Consideration of experimental data is essential in a fragility assessment primarily for the purpose of characterizing the structural performance in terms of an appropriate "limit-state". Almost all the studies have focused on evaluating the seismic fragilities of structural components or sub-systems. Limitations in conducting large-scale experiments are a key obstacle in the evaluation of system-level fragilities. This is particularly true in the case of piping-systems for which the key steps in evaluating system-level fragility comprises of following steps:

- Characterizing the performance "limit-state" of joints in a piping system using experimental results from testing of components.
- Developing equivalent non-linear finite element model of the components such that the results reconcile with the experimentally observed behavior.
- Incorporating the non-linear model in an actual piping system model for the purpose of conducting a system level analysis and evaluate system level fragilities.
- Evaluating system-level fragilities for failure at different locations within the piping system.

2.2 The INL Generic Boiling Water Reactor (IGBWR) Model

For BWRs, discussions and planning of types of components, structures, soil, PRAs models necessary to execute the Industry Application #2 plan, are activities for future development, as outlined in Section 4. In short, the same strategy used for building the IGPWR Model will be applied to the construction of the IGBWR Model, respectively.

3. THE RISMC METHODOLOGY AND TOOLKIT

The EEVE project will be developed in two phases. First, for fiscal years 2016-18 we will demonstrate EEVE-B, using 'Baseline' (already existing) RISMC tools and methods to demonstrate some of the eight elements shown in Figure 24. Second, for fiscal years 2017-2020, we will demonstrate most of all eight elements of EEVE-A, shown in Figure 24, which will include 'Advanced' (in development by LWRS and other DOE R&D Programs) RISMC tools and methods.

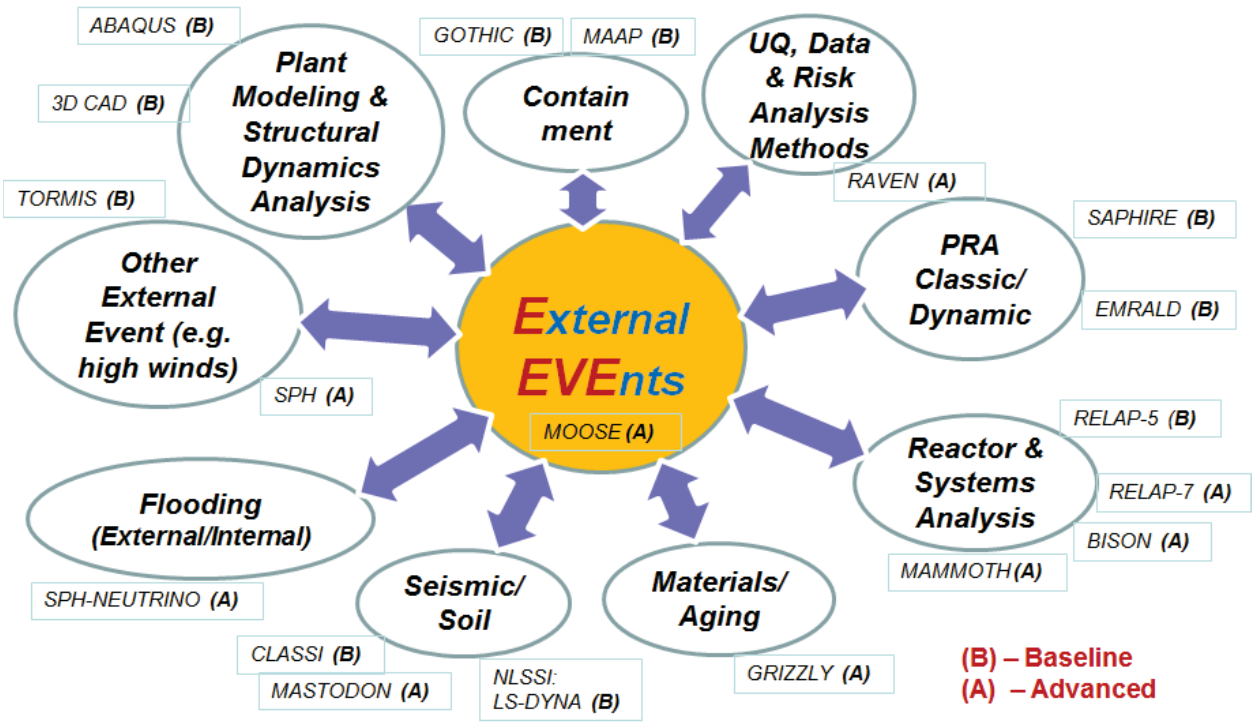

Figure 24. Schematic Illustration of EEVE-A and EEVE-B.

3.1 Phase I – EEVE-B (Baseline)

For the first three years, the (B) elements of Figure 24, of the EEVE-B toolkit are exercised. Each element implements a set of existing, established code(s) into the EEVE-B toolkit, as illustrated in Figure 24, (B). A set of all activities to be executed within this timeline is outlined in Table 3.

3.1.1 Example of Baseline Workflow

An example of the Baseline Workflow is reported in Figure 25. The main steps of the EEVE-B approach are the following:

1. Perform Hazard Assessment (i.e., evaluate EQ spectra, flooding scenarios, site characteristics, etc…and select the SSC to be analyzed)
2. Calculate the Non-linear Soil Structure Interaction (NLSSI) for the main NPP buildings
3. Develop Fragility Models for selected SSC
4. Perform the EQ analysis on selected SSC

5. Derive Boundary Conditions (e.g., likelihood of pipe breaks, levee break, etc.) for the flooding analysis
6. Update the PRA model
7. Execute combined Flooding + SYS TH analysis using Dynamic Event Tree
8. Perform UQ on all previous steps using suitable Uncertainties Database
9. Analyze the Output and assess the Risk and Safety Margins

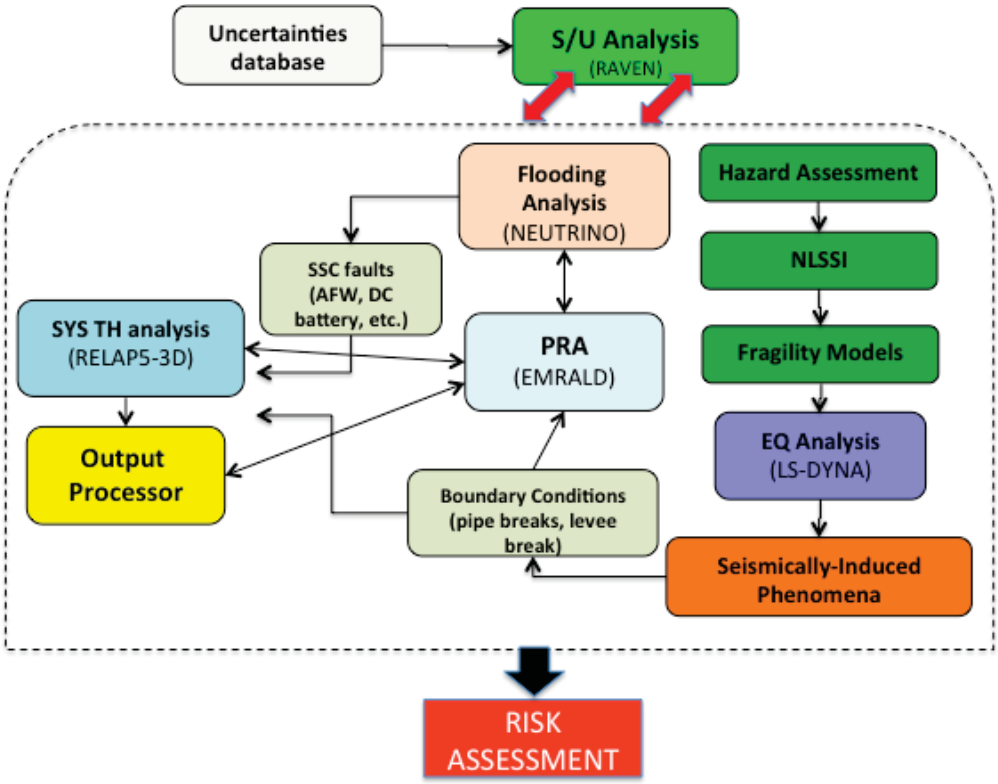

Figure 25. Schematic Illustration of EEVE-B.

3.2 Phase II – EEVE-A (Advanced)

In conjunction with the Baseline development, for a period of about four years, the advanced phase of the EEVE project will be executed (FY2017-2020). The duration and timeline associated with the EEVE-A phase is in part dependent on the execution and lessons learned of the Baseline phase, and availability and maturity of the advanced tools in development today. An example of tools and methods to be implemented during the advanced phase is shown in Figure 24, (A). Also, a set of all activities to be executed during Phase II is outlined in Table 3.

3.2.1 Example of Advanced Workflow

An example of the Advanced Workflow is reported in Figure 26. The main steps of the EEVE-A approach are similar to the EEVE-B approach but differ for the following:

- Use of advanced MOOSE tools for the NPP analysis, e.g.:
    - RELAP-7 for SYS TH analysis
    - GRIZZLY for Aging Effects
    - MASTODON for NLSSI
    - MAMMOTH (RATTLESNAKE + BISON) for deriving core boundary conditions
- Use of DET and S/U on all calculation steps
- Derivation and use of Surrogate Models for speeding up calculations

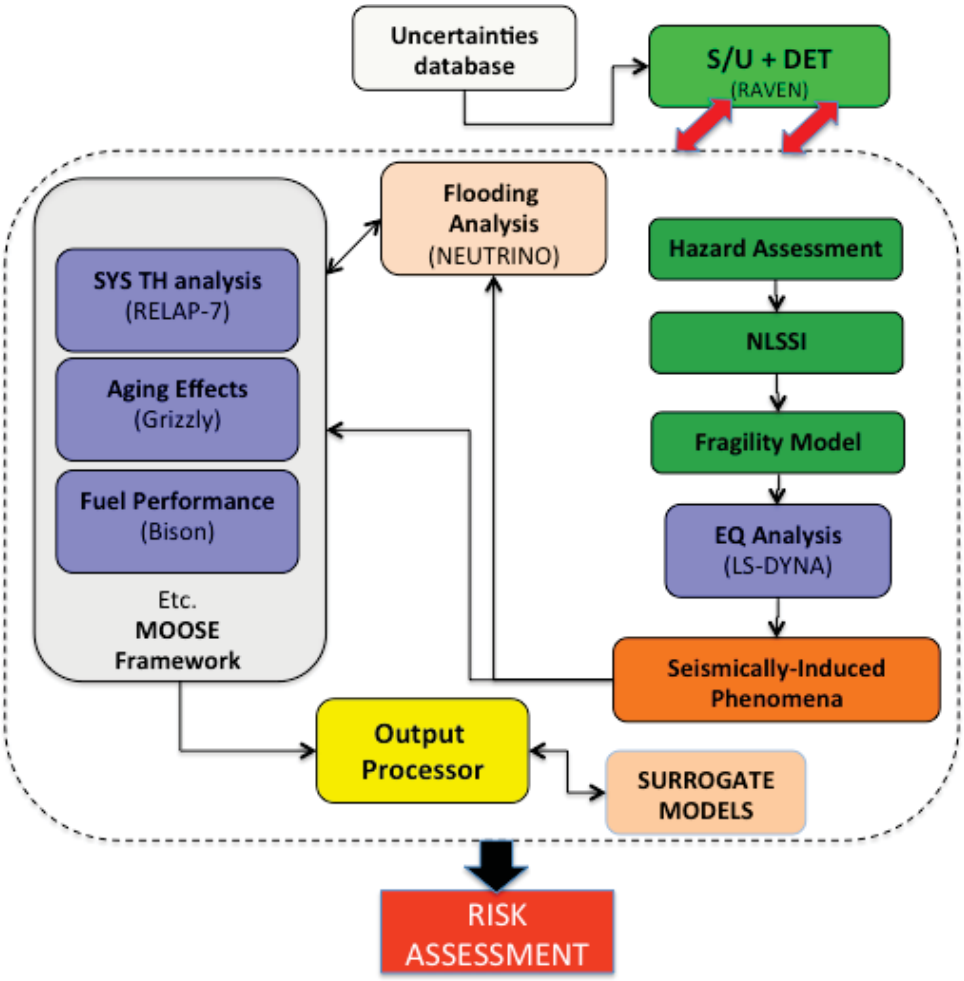

Figure 26. Schematic Illustration of EEVE-A.

4. THE INDUSTRY APPLICATION ROADMAP (FY 2016 – FY 2020)

A roadmap and timeline for development and implementation of IA2 is shown in Table 3. Here we present a multi-year project timeline for both Baseline and Advanced activities, based on input from all models described in the previous sections.

Table 3. EEVE-A/B Timeline of Activities and Respective Technical Areas of Development.

Technical Areas	Phase I: EEVE-B			Phase II: EEVE-A			
	FY2016	FY2017	FY2018	FY2017	FY2018	FY2019	FY2020
Plant Modeling & Structural Dynamics	Run PWR model in LS-DYNA and link with EMRALD to perform SPRA calculations	Repeat FY-16 tasks with new soil and seismic hazard information	Run BWR model in LS-DYNA and link with RAVEN/EMRALD to perform SPRA calculations	Run PWR Model in MASTODON identify sensitivities	Determine how to implement non-vertically propagating shear waves into PRA calculations (RAVEN). MASTODON will be used to perform sensitivity studies	For PWR Couple MASTODON, RAVEN, RELAP-7, GRIZZLY, using EEVE	For BWR Couple MASTODON, RAVEN, RELAP-7, GRIZZLY, using EEVE
	Provide results to piping simulations to determine P(f) and identify probable failure locations.	Complete structural dynamic calculations for additional NPP systems such as RHR	Provide results to piping simulations to determine P(f) and identify probable failure locations	Couple RAVEN with MASTODON to perform uncertainty quantification	Couple RAVEN with MASTODON to perform and ROM		
	Determine P(f) for fire suppression system (NCSU)	Provide structural dynamic results on containment response to TH analysis and PRA	Determine P(f) for fire suppression system (NCSU)	Perform structural dynamic analysis to support PRA calculations of spent fuel pool	Perform structural dynamic analysis to support PRA calculations of PWR, coupled with BISON		
Flooding Analysis (External / Internal)	Develop initial 3D spatial model for internal flooding with key components and piping			Continue 3D spatial modeling. Add site model with external flooding from dike failure	Expand the site 3D spatial model for large area simulation from dam breaks		

	Internal Flooding analysis from pipe fracturing caused by seismic events.			Add external flooding analysis from dike failures caused by seismic induced dike failures	Couple 2D & 3D simulation methods to perform large scale flooding events such as dam failures		
Seismic Inputs	Use modified seismic hazard curve and associated time series	Use additional seismic hazard curves that are representative of other NPP sites across the U.S.	Use suite of seismic hazard curves developed in FY-16 and FY-17	Use modified seismic hazard curve and associated time series	Use additional seismic hazard curves that are representative of other NPP sites across the U.S.	Use suite of seismic hazard curves developed in FY-16 and FY-17	
	Use Vogtle soil profile in structural dynamic simulations	Generate additional time series that are representative of other NPP sites across the U.S.	Use suite of time series developed in FY-16 and FY-17	Use Vogtle soil profiles for the structural dynamic simulations	Generate inclined wave input consistent with seismic hazard curves	Generate inclined wave input consistent with seismic hazard curves	
				Implement capability to perform coherency calculations in MASTODON			
UQ, Data and Risk Analysis	RAVEN S/U analysis	RAVEN S/U analysis	RAVEN S/U analysis	RAVEN S/U analysis on RELAP7 calculations	RAVEN S/U analysis on RELAP7 calculations	RAVEN S/U analysis on RELAP7 & Containment calculations	RAVEN S/U analysis on RELAP7- & Containment calculations
Containment Analysis		GOTHIC code PWR Containment modeling & coupling with RELAP5-3D	GOTHIC code BWR Containment modeling & coupling with RELAP5-3D			PWR Containment modeling (MOOSE tool) & coupling with RELAP7	BWR Containment modeling (MOOSE tool) & coupling with RELAP7
Reactor and Systems Analysis	RELAP5-3D IGPWR Primary/Secondary sides modeling	RELAP5-3D modeling of IGPWR Auxiliary systems	RELAP5-3D IGBWR Primary/Secondary sides modeling	RELAP7 modeling of spent fuel pool (SFP)	RELAP7 IGPWR Primary/Secondary sides modeling	RELAP7 modeling of IGPWR Auxiliary systems	RELAP7 IGBWR Primary/Secondary sides modeling
	HFP accidents (EQ-LOSP + flooding)	HFP or Shutdown accidents (e.g., EQ-LOSP + MCP seal LOCA or Loss of RHRS)	RELAP5-3D two-ways coupling with EMRALD	Fukushima-type accident (EQ-LOSP + flooding + loss of SFP cooling)	HFP transients (EQ-LOSP + flooding)	HFP / shutdown transients (e.g., EQ-LOSP + MCP seal LOCA or Loss of RHRS)	RELAP7 two-ways coupling with EMRALD

	RELAP5-3D one-way coupling with EMRALD	RELAP5-3D two-ways coupling with EMRALD			RELAP7 one-way coupling with EMRALD	RELAP7 two-ways coupling with EMRALD	
PRA	Begin SAPHIRE PRA model for a generic reactor	Advance the generic reactor SPAHIRE PRA model	Complete the generic reactor SPAHIRE PRA model				
	Begin EMRALD dynamic PRA model for a generic reactor			Advance the EMRALD dynamic PRA model to match the SAPHRIE PRA model.			
	Use EMRALD to couple Probabilistic, Thermal Hydraulics, 3D physics, and Seismic analysis of a system for the initial IGPWR models						
Materials/ Aging					Link GRIZZLY to MASTODON, using EEVE	Continue GRIZZLY Development	Continue GRIZZLY Development
Other External Events						Develop method for incorporating high wind events	

5. WORK PLAN SUMMARY

The RISMC program and the plan for the industry application were presented in the previous INL report INL-EXT-14-33186. The demonstration objectives are:

1. Provide confidence and a technical maturity in the RISMC methodology (essential for broad industry adoption)
2. Strong stakeholder interaction required
3. Address a wide range of current relevant issues
4. Three phase approach:
   - Problem definition (3-6 months) – (on going)
   - Early Demonstration (eDemo) (limited scope) (6-12 months)
   - Complete Application and Validation (Long Term- Methods, Tools, Data) (1-5 years)

The project definition, statement and objectives for Industry Application 2 (IA2) were further developed in INL-EXT-15-36101. The focus of the current report is to outline a viable long term plan and timeline encompassing all three phases indicated above.

Phase 2 considers a series of demonstrations that are realistic and relevant to the industry stakeholder. In these demonstrations, plant owner/operators actively participate by providing plant information to a given demonstration. Initially, demonstrations are a simplified version (prototype) of an integrated evaluation model. Each discipline is modeled with very simple reduced order models (ROMs). The goal is to identify all the inputs and disciplines involved and compute the approximated value of the outputs to construct a first tier "knowledge database". The "knowledge database" is then analyzed with emulators for the purpose of illustrating very complex problems. Later a more realistic and credible solver is used to represent the complete multi-physics demonstration.

As the program enters subsequent phases (Phase 3 and beyond) each discipline (simply represented by early demonstrations in Phase 2) is properly replaced by realistic simulators, therefore improving the fidelity and quality of the "knowledge database". Hence, Phase 3 of the Industry Applications considers the full spectrum of demonstrations with all advanced features of the RISMC toolkit (concurrently in development while early RISMC demonstrations take place), including Verification, Validation, and Data Analysis. These will include applications of RAVEN and RELAP7, also including other models in the MOOSE framework, as needed.

In the previous section we have compiled a multi-year task-by-task plan encompassing all phases of Industry Application #2.

6. REFERENCES

C. Smith, C. Rabiti, R. Martineau, R. Szilard, "Risk-Informed Safety Margin Characterization (RISMC) Pathway Technical Program Plan," INL/EXT-11-22977, Revision 3, INL, September 2015.

D. Gaston, G. Hansen and C. Newman, "MOOSE: A Parallel Computational Framework for Coupled Systems for Nonlinear Equations," in *International Conference on Mathematics, Computational Methods, and Reactor Physics*, Saratoga Springs, NY, 2009.

CentroidLab, "Neutrino Dynamics," Centroid Lab, [Online]. Available: http://www.centroidlab.com/neutrinodynamics/. [Accessed 10 March 2016].

C. S. T. K. T. Y. S. Prescott, "Case Study for Enhanced Accident Tolerance Design Changes," INL/EXT-14-32355, Idaho National Laboratory, Idaho Falls, 2014.

R. Szilard, J. Coleman, C. Smith, S. Prescott, A. Kammerer, R. Youngblood, C. Pope, "Industry Application External Hazard Analyses Problem Statement," INL/EXT-15-36101, Idaho National Laboratory, July 2015.

R. Szilard, C. Smith, R. Youngblood, "RISMC Advanced Safety Analysis Project Plan - FY 2015-FY 2019," INL/EXT-14-33186, Idaho National Laboratory, September 2014.

IAEA, "Deterministic Safety Analysis for Nuclear Power Plants", Specific Safety Guide No. SSG-2, Vienna, 2009.

RELAP5-3D© Code Manual. Volume I: Code Structure, System Models and Solution Methods, INL/MIS-15-36723, Revision 4.3. October 2015.

C. Allison and J. Hohorst, "Role of RELAP/SCDAMSIM in Nuclear Safety", Science and technology of Nuclear Installations, Volume 2010 (2010), Article ID 425658.

R. Gauntt, et al., 2005, MELCOR-H2 Computer Code Manuals, Vol. 2: Reference Manuals, Version 1.8.6, Prepared by Sandia National Laboratories for the U.S. Nuclear Regulatory Commission, Office of Nuclear Regulatory Research, NUREG/CR-6119, Vol. 2, Rev. 3, SAND 2005-5713, September 2005.

Modular Accident Analysis Program 5 (MAAP5) Applications Guidance: Desktop Reference for Using MAAP5 Software - Phase 2 Report. EPRI, Palo Alto, CA: 2015. 3002005285.

U.S. NRC, "Severe Accident Risks: An Assessment for Five U.S. Nuclear Power Plants ", Final Summary Report, NUREG-1150, Vol.1, Part II. December 1990.

U.S. NRC, "State-of-the-Art Reactor Consequence Analyses Project. Volume 2: Surry Integrated Analysis.", NUREG/CR-7110, Vol. 2, Rev. 1. August 2013.

GOTHIC Containment Analysis Package: Technical Manual, NAI 8907-06 Rev16, 2005.

D. Papini, et al., "Analysis of Different Containment Models for IRIS Small Break LOCA, using GOTHIC and RELAP5 Codes," *Proceedings of the International Conference – Nuclear Energy for New Europe 2009*, Bled, Slovenia, September 2009.

C. Parisi, A. Del Nevo, et al., "A preliminary analysis of the unit 1 accident at the Fukushima Daiichi NPP by the RELAP/SCDAPSIM code", Atw. Internationale Zeitschrift fuer Kernenergie; Vol. 58, pg. 18-21, ISSN 1431-5254, Jan. 2013.

U.S. NRC, "Evaluation of Potential Severe Accidents During Low Power and Shutdown Operations at Surry, Unit 1. Analysis of Core Damage Frequency from Internal Floods During Mid-loop Operations", NUREG/CR-6144, Vol. 4. July 1994.

A. H. Varma, J. Seo, J. Coleman, “Application of Nonlinear Seismic Soil-Structure Interaction Analysis for Identification of Seismic Margins at Nuclear Power Plants,” INL/EXT-15-37382, Idaho National Laboratory, Idaho Falls, Idaho, 2015.

J. Coleman, R. Spears, “Nonlinear Time Domain Seismic Soil-Structure Interaction (SSI) Methodology Development,” September 2014.

J. Coleman, C. Bolisetti, A. S. Whittaker, "Time-Domain Nonlinear Soil-Structure Interaction Analysis for Nuclear Facilities", Nuclear Engineering and Design, 298, pp 264–278, 2016.

C. Bolisetti, J. Coleman, M. Talaat, P. Hashimoto, " Advanced Seismic Fragility Modeling using Nonlinear Soil-Structure Interaction Analysis," INL/EXT-15-36735, Idaho National Laboratory, Idaho Falls, Idaho, September 2015.